BAFFLE STRIP

FOR INTERIOR

BAFFLE STRIP

The Baffle strip is suitable for environments that have special aesthetic and acoustic requirements. The multi-module choice is suitable for dynamic environments and the aesthetic result is pleasing.

Technical characteristics

European Standard:	CE EN 13964
Durability:	Class B
Fire resistence:	A1
Sound absorption:	EN ISO 354
Standard colour:	• Silver • White • AISI • Post-painted
Finish:	• Smooth • Perforated
Standard material:	Alluminium (3000H46 / 1050AH) Galvanized steel (DX51DZ)
Standard thickness:	Alluminium 0,5 - 0,6 - 0,8 mm Steel 0,4 - 0,5 - 0,6 mm

Finish

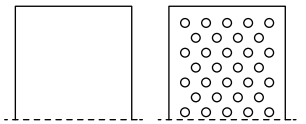

Smooth

Perforated with TNT

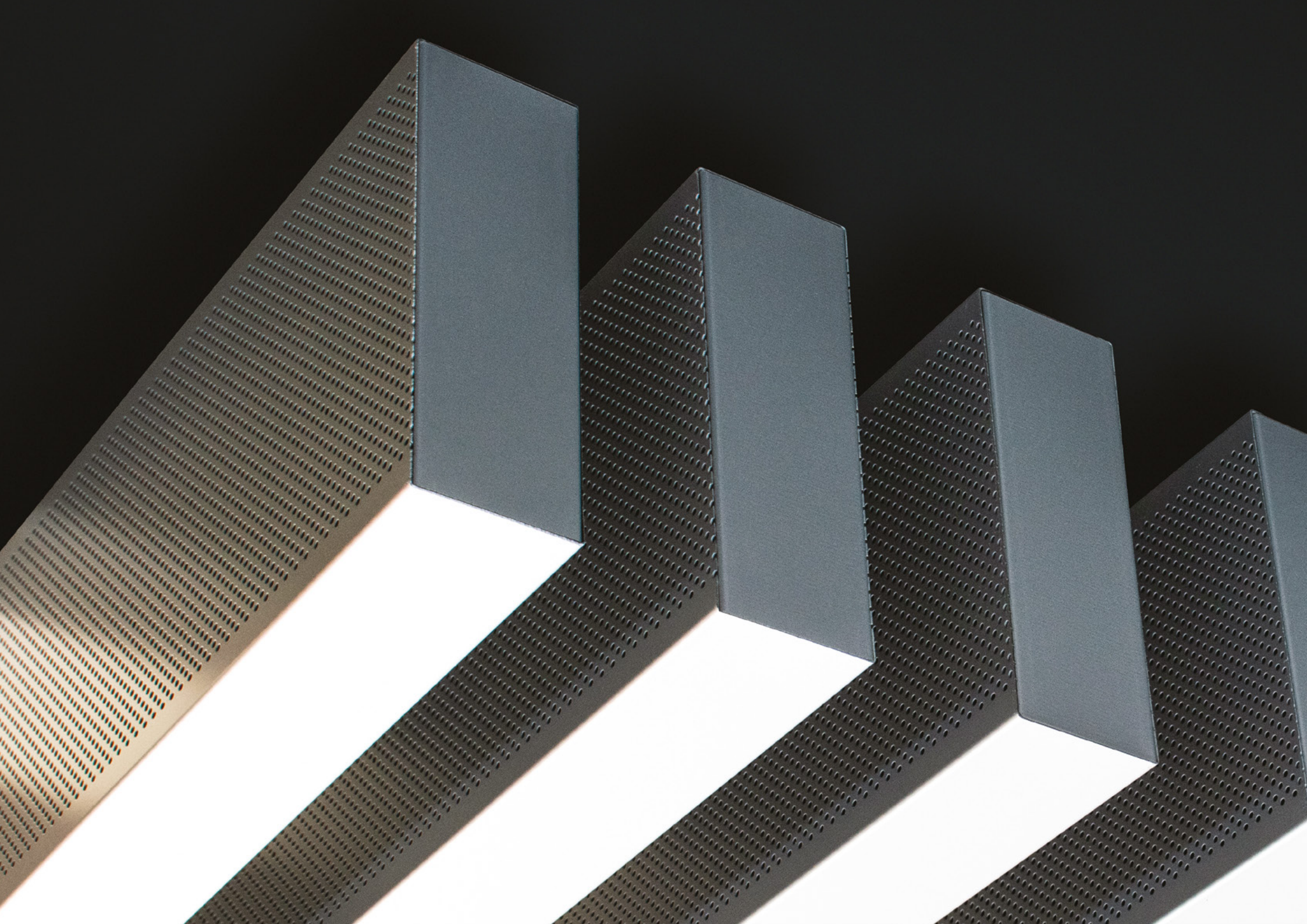

ANTI-HOOK

BAFFLE STRIP

Strips incidence and suitable carriers

Strip type	Pitch	Strips m/m²	Suitable carrier	Carrier m/m²	Suspension pes./m²
BAFFLE	50	20,0	TR13	0,83	0,70
BAFFLE	100	10,0	TR13	0,83	0,70

Maximum wheelbase and overhang advised

	A	B	C	D
Without insulation	1200	1200	750	500

Anti-hook Baffle strip on TR13 carrier

Click-in mounting

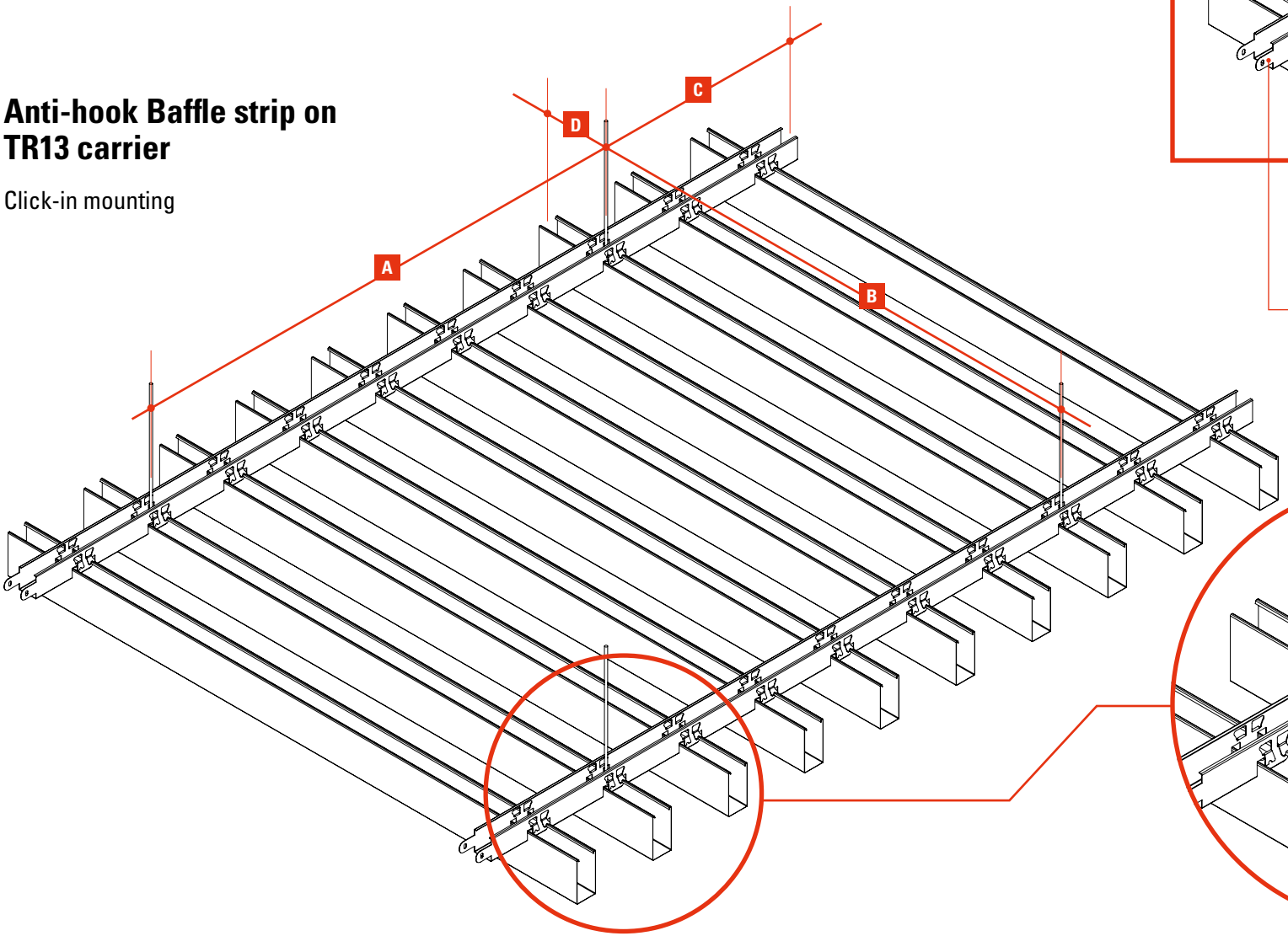

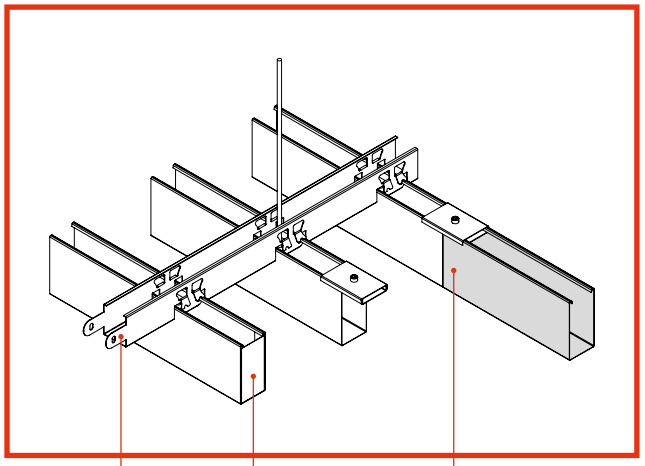

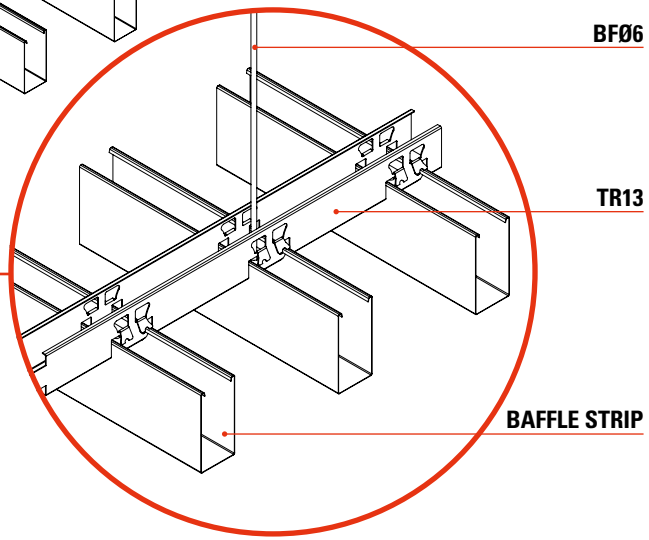

A) Carrier with anti-hook strips clip

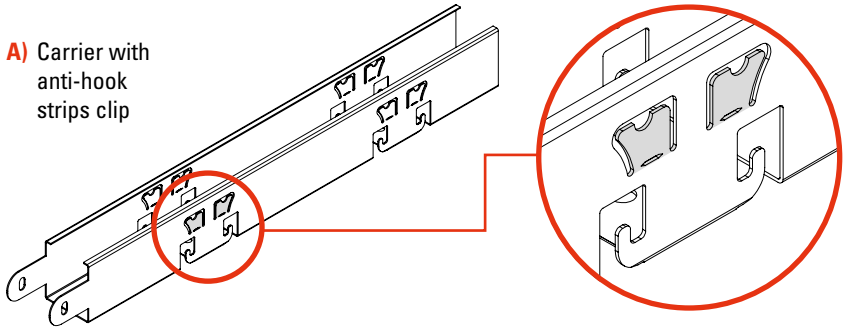

B) After inserting the strips lower the anti-hook clips

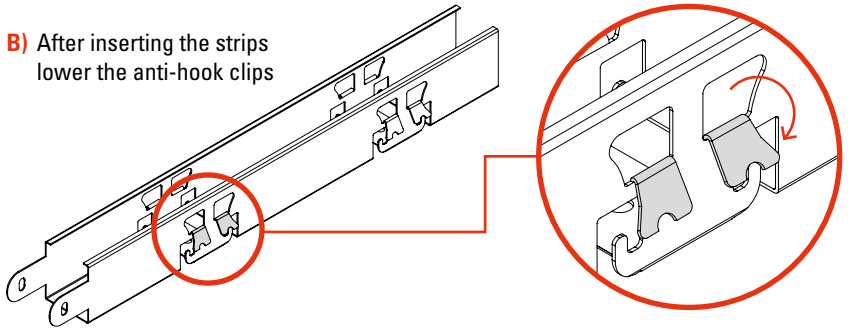

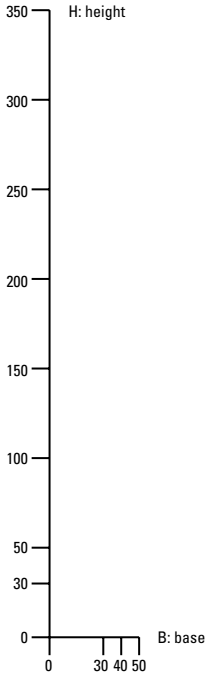

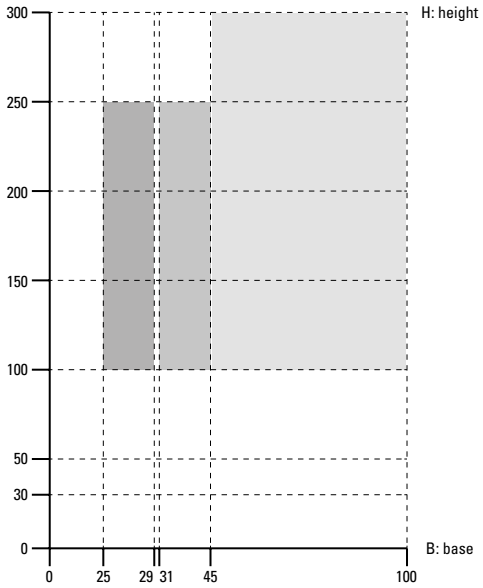

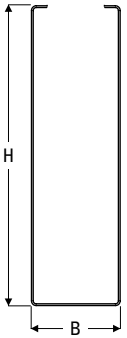

Standard strips dimensions
Maximum metal thickness up to 0,7mm
Maximum length 4000mm

Strips dimension upon request
Maximum metal thickness 0,8mm
Maximum length 4000mm

False ceiling with Baffle strip

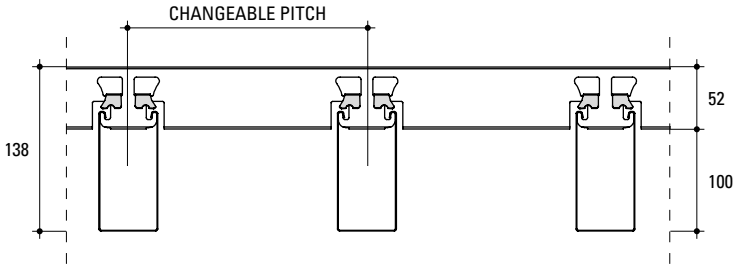

Suitable carrier for a standard pitch or according to project (custom)

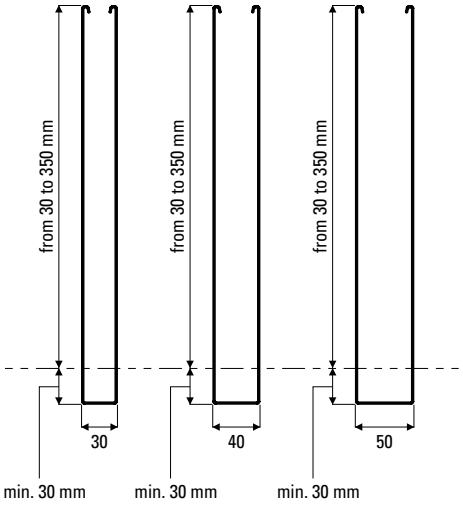

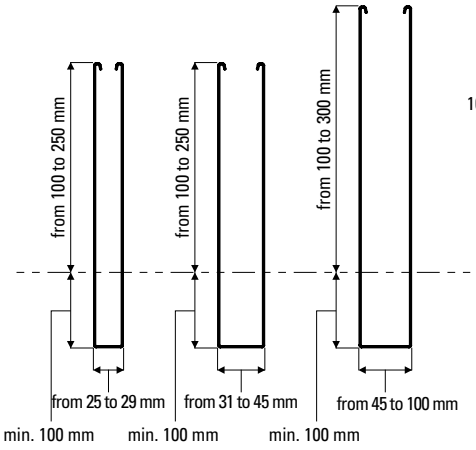

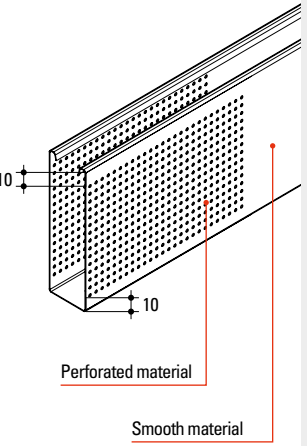

MULTI-MODULE

BAFFLE STRIP

Strips incidence and suitable carriers

Strip type	Pitch	Strips m/m²	Suitable carrier	Carrier m/m²	Suspension pcs/m²
BAFFLE	50	20,0	TR8	0,83	0,70
BAFFLE	100	10,0	TR8	0,83	0,70

Maximum wheelbase and overhang advised

	A	B	C	D
Without insulation	1200	1200	750	500

Multimodule Baffle Strip on TR8 carrier

Click-in mounting

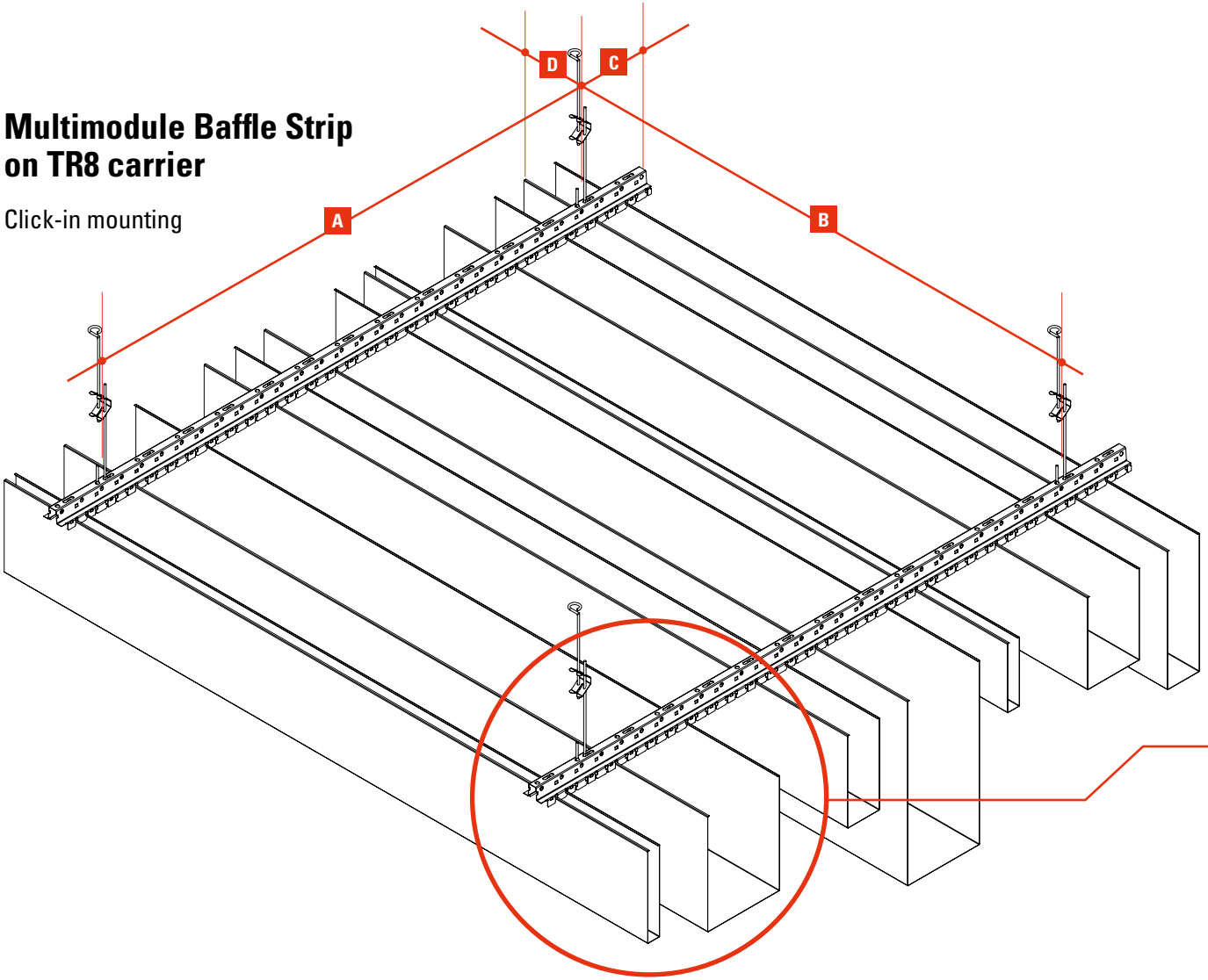

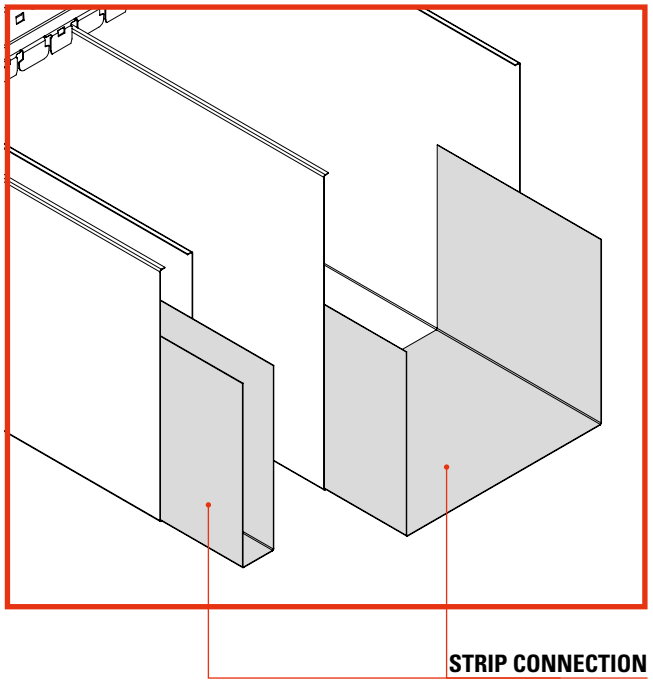

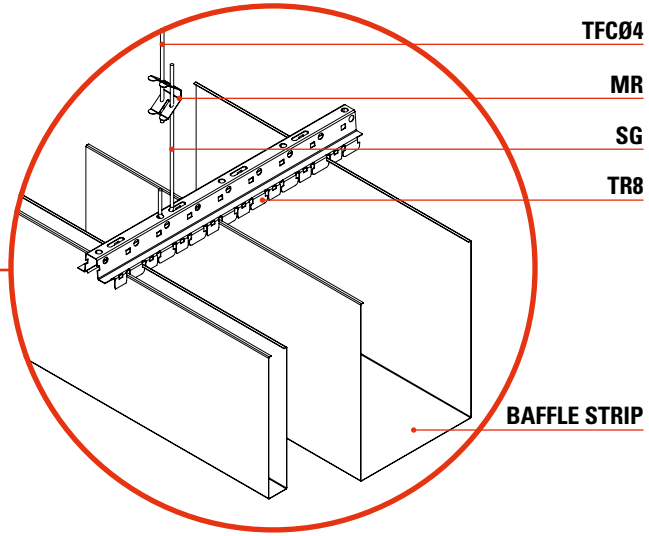

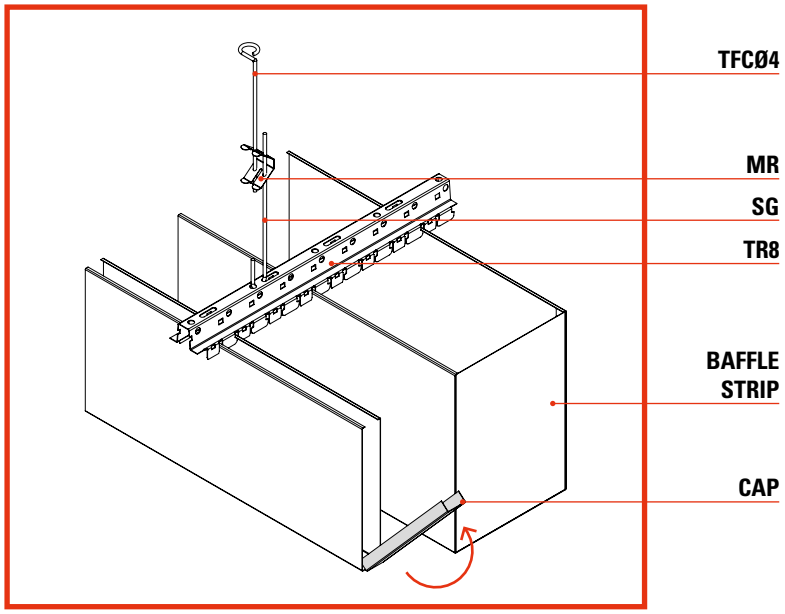

Lowering the flap of the carrier as anti-hook device for the strip

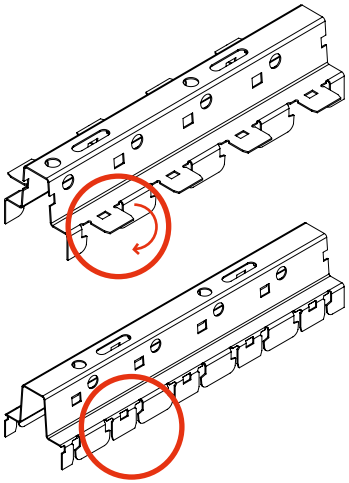

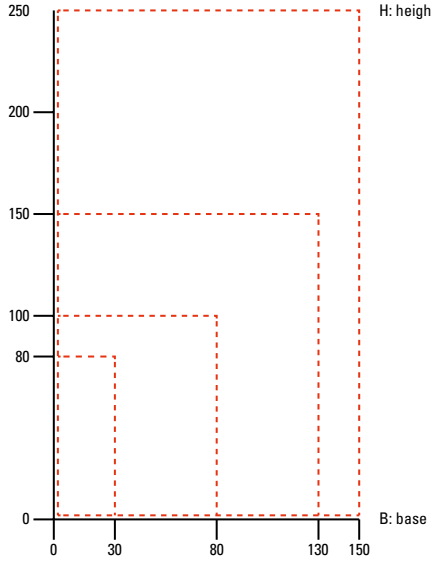

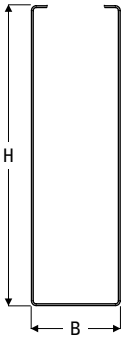

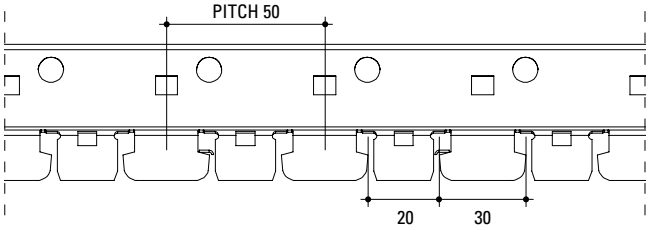

Constant height baffle

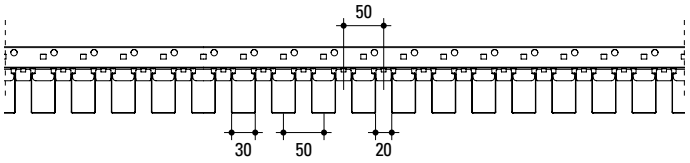

Multimodule baffle

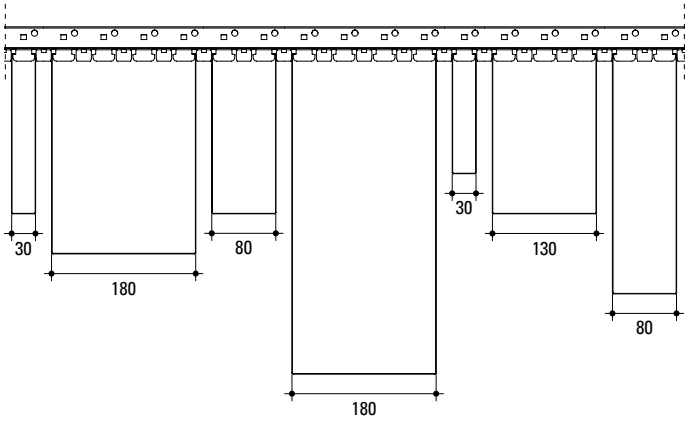

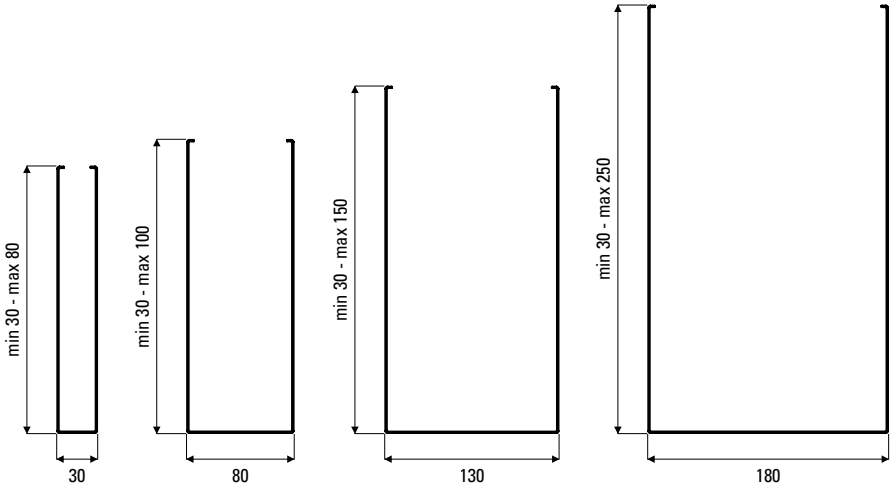
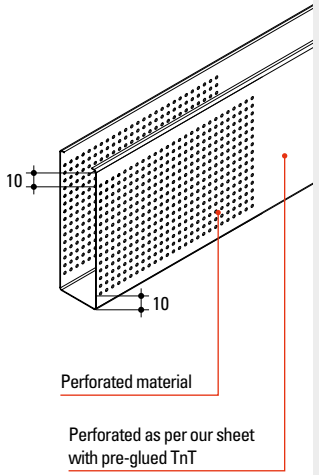
Carrier suitable for solutions with random application