Guerrasio
VERTEBRA.com

G SEISMIC

ANTI-SEISMIC
SOLUTIONS

50

1970 / 2020
50° ANNIVERSARIO

G SEISMIC

*The **anti-seismic** solution for **all false ceilings** on metal structure.*

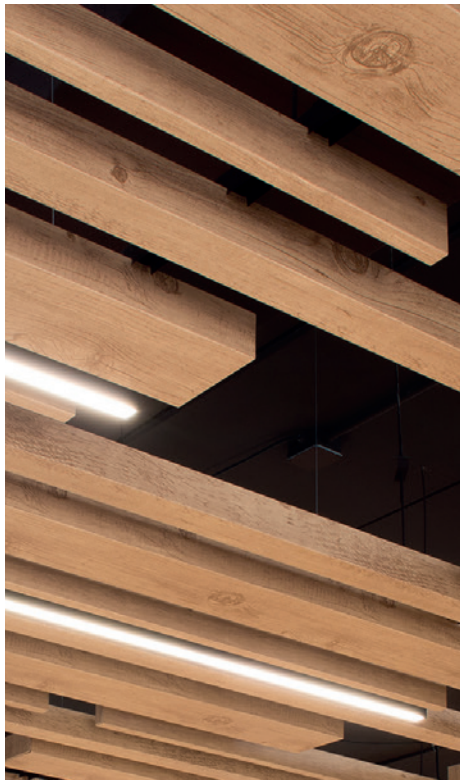

Guerrasio VERTEBRA.com

Anti-seismic kit for false ceilings

G SEISMIC

the first, the best.

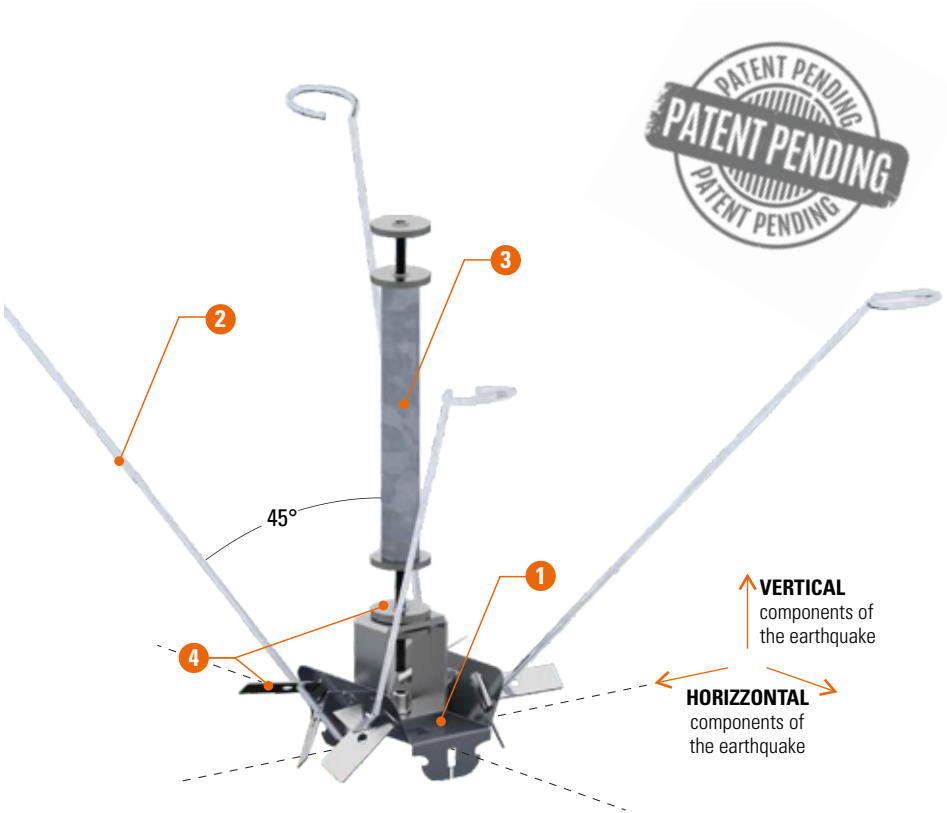

The **G SEISMIC kit** is the first anti-seismic suspension system suitable for ***all types of false ceilings*** with metal structure, whether they support panels, strips, cell ceiling or even plasterboard.

The kit has been designed, developed and made by **Guerrasio** in collaboration with the Department of **Structures for Engineering and Architecture** of **University of Naples Federico II**.

It is composed by a central connecting element with the supporting structure (**1**), by the diagonal ties (**2**) inclined at 45° and by central strut (**3**) which, together with the connecting elements, such as washers and adjustment springs (**4**) allow a simple installation and a millimetric adjustment of the system.

Applied on the supporting or primary profile, that is on the structure that is suspended directly from the ceiling, and together with the perimeter accessories, it makes the false ceiling system suitable to respond adequately to the stresses of a jolting and undulating earthquake.

The kit is available in two versions for the different open spaces between supporting structure and false ceiling: **Kit 1050** (for heights from 200 up to 1050 mm) and **Kit 2050** (for heights from 1050 up to 2050 mm).

G SEISMIC Kit
Normative requirements

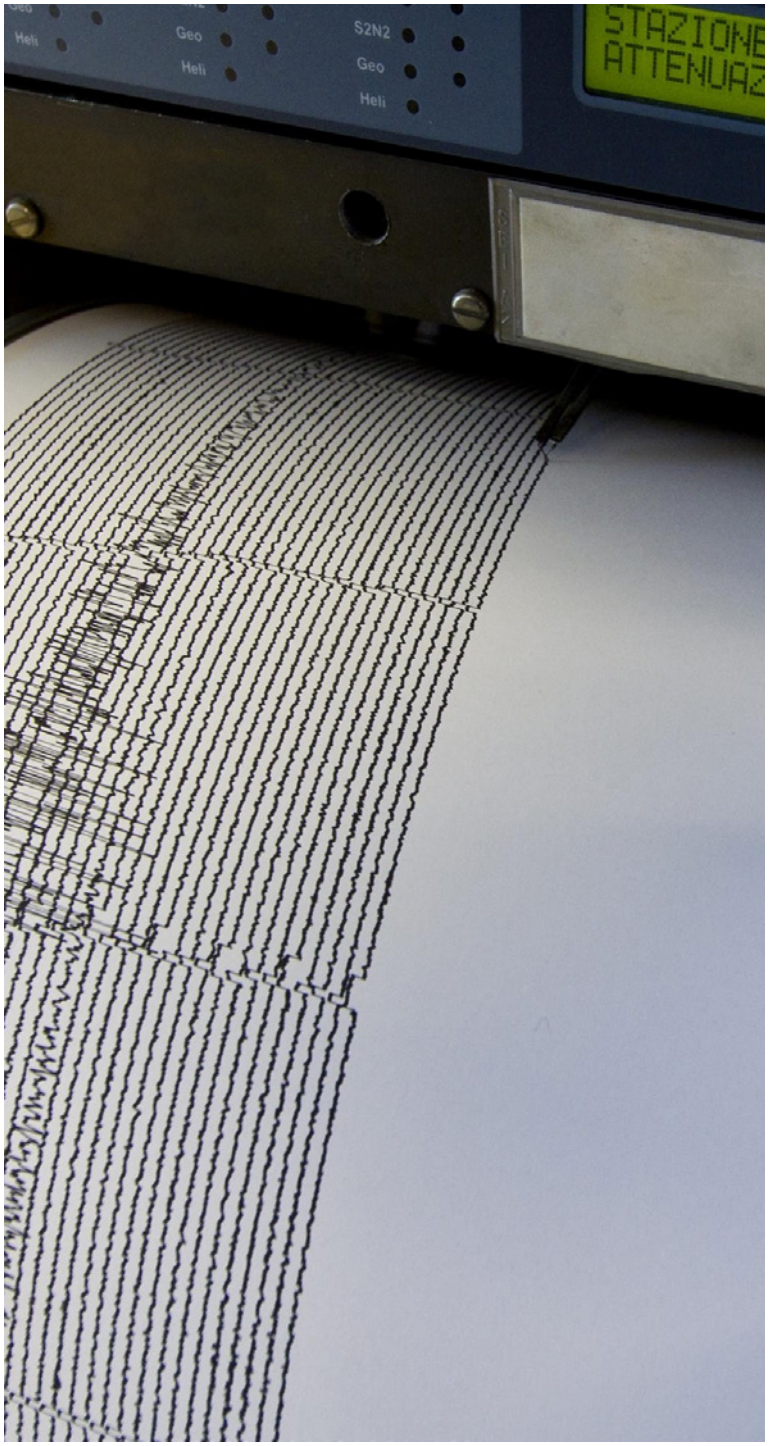

UNIVERSITÀ DEGLI STUDI DI NAPOLI FEDERICO II - DIPARTIMENTO DI
STRUTTURE PER L'INGEGNERIA
E L'ARCHITETTURA

The **G SEISMIC** Kit has been designed and tested by the **GUERRASIO** technical department at the **University of Naples Federico II** - in collaboration with the **Department of Structures for Engineering and Architecture** in order to evaluate and verify the suitability and resistance of the system to the requirements of the **Technical Standards for Construction** (NTC | D.M. 14.01.2008 and update NTC 2018 with D.M. of 17.01.2018), in particular with what is reported in the paragraph 7.2.3. of the NTC.

Technical Documents

Technical Documents issued on request

(A) Technical suitability of the suspension system G SEISMIC issued by GUERRASIO

(B) Technical report of seismic calculation

In fact, according to paragraph 7.2.3 of **NTC / D.M. 17/01/2018** (Design criteria for secondary structural elements and non-structural elements), in case the non-structural element is assembled on site (as is the case for the **G SEISMIC** system):

- it is up to the designer of the structure to identify the seismic demand;
- it is the supplier's and/or installer's task to provide elements and connection systems of adequate capacity;
- it is the job of the site manager to check that it is properly assembled.

Our technical department using the **G SEISMIC** software determines, by setting the necessary parameters, the quantities of kits for each site and therefore the minimum quantity of cases to be ordered.

The calculation of the incidence can consider both the **NTC08** and the **NTC18** in the case for the determination of the simplified fundamental period T1 for H<40.

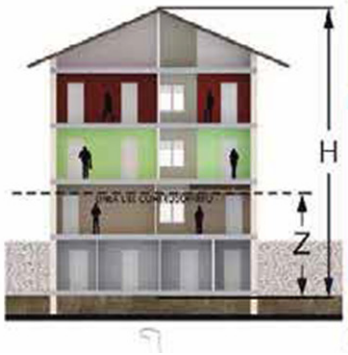

G SEISMIC Kit
Technical incidences

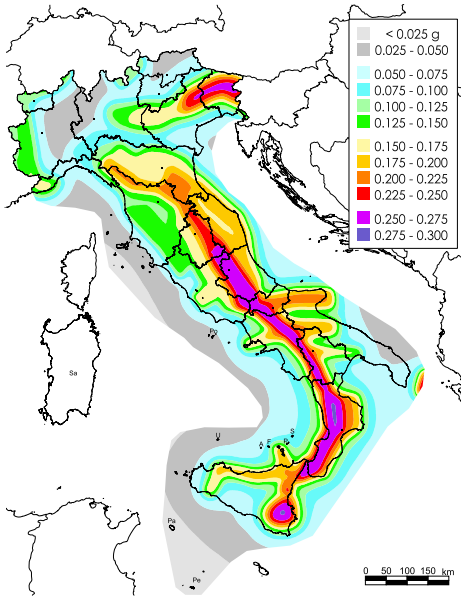

MEDIUM TECHNICAL INCIDENCES FOR THE VARIOUS TYPES OF EARTHQUAKE*			
WEIGHT OF THE CEILING	**1 Kit/m² - WEIGHT OF THE FALSE CEILING**		
SEISMIC AREA	**5 Kg/m²**	**10 Kg/m²**	**15 Kg/m²**
1 Ag= 0,35 indicates the most dangerous area, where there may be extremely strong earthquakes	1 / 8,0	1 / 4,0	1 / 3,0
2 Ag= 0,25 indicates the most dangerous area, where there may be strong earthquakes	1 / 10,0	1 / 5,0	1 / 4,0
3 Ag= 0,15 indicates the area that may be subject to strong but rare earthquakes	1 / 15,0	1 / 8,0	1 / 5,0
4 Ag= 0,05 indicates the less dangerous zone and it is possible for the Regions to prescribe the design obligation	1 / 40,0	1 / 24,0	1 / 18,0

***Theoretical evaluation carried out considering:**
- Fundamental period of vibration T1 = C1 · H3/4 (C1 in reinforced concrete by NTC DM14/01/08);
- Underground category S=1;
- Maximum value of the estimated incidence on a 4-storey building on each floor with a false ceiling extrados equal to 0.30 m.

In order to determine the exact number of **G SEISMIC** Kits required in a site it is necessary to provide the following technical information:

- Location of the site in geographical coordinates
- Type of ceiling and corresponding weight/m²
- Destination of use of the structure
- Type of structure (steel, reinforced concrete or other) - NTC08, fundamental period of building vibration T1 - NTC18
- Plan and sections (total height of the building and application plans of the ceiling) for the arrangement of the **G SEISMIC** and its accessories
- Geological information of the subsoil (category S)
- Additional information

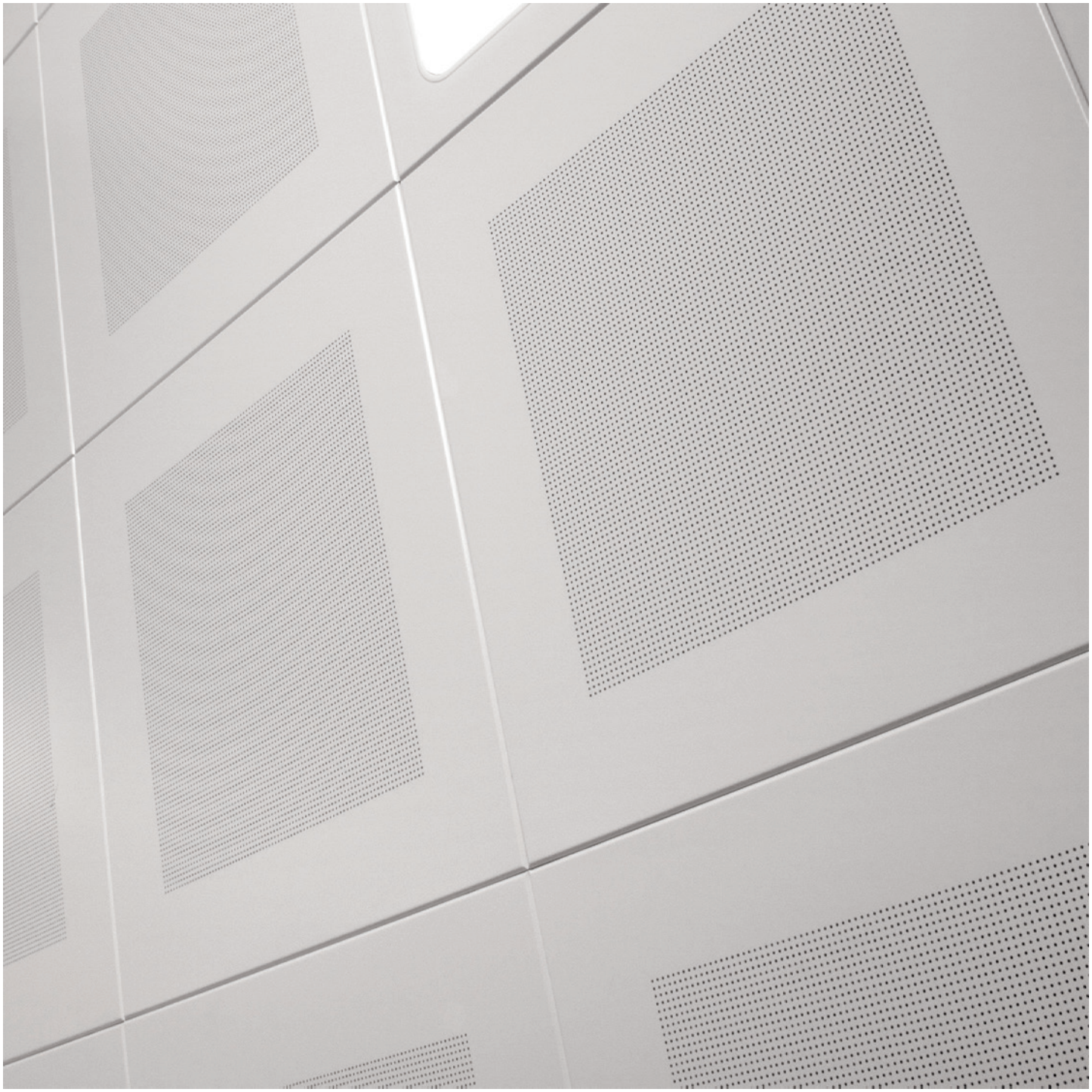

G SEISMIC Kit ON **T**-STRUCTURE

ANTONIO GUERRASIO
G SEISMIC • ANTI-SEISMIC SOLUTIONS

G SEISMIC SCHEME ON **T**-STRUCTURE

Locked profile

Det. A

Det. B

Free profile

Perimeter

PP3700

Sec. A

G SEISMIC

TBØ4

Free profile

IC600

Sec. B

SPPT

IL1200

Locked profile

Locked profile

Free profile

Free profile

Det. A

Det. B

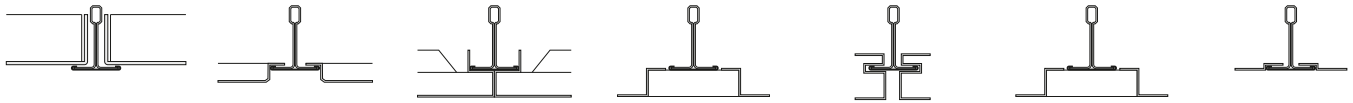

VISIO | SEMI VISIO | VERT LAB | VERT TILE | VERT BOX | VERT PAR | FLAT

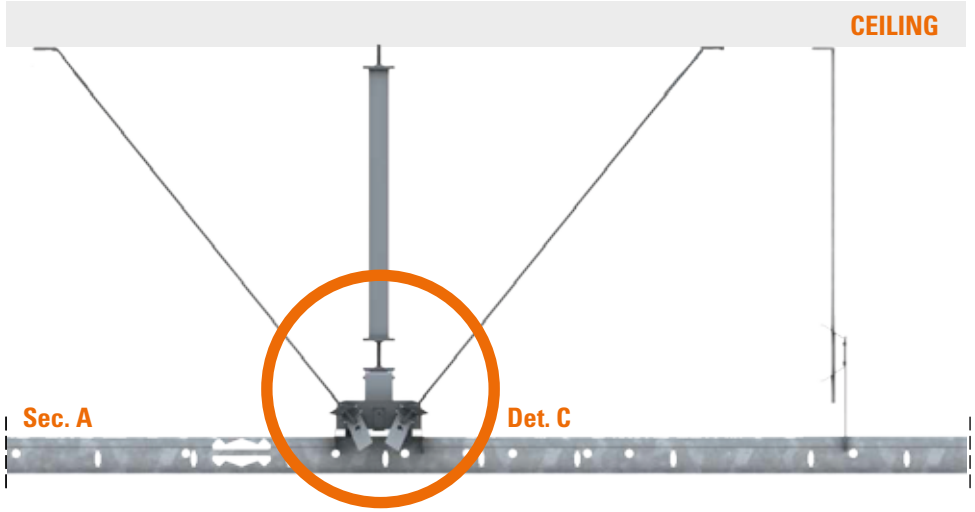

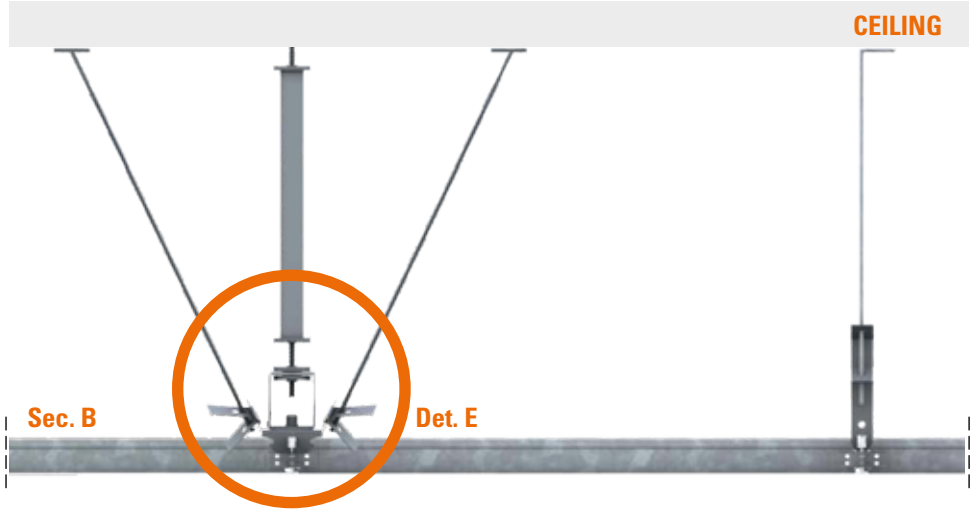

The **G SEISMIC** system must be installed on the carrier PP3700 of the structure. Once inserted, it must be fixed using self-drilling screws (Det.C,E). The installation should be avoided at intersections between carriers and cross-tee profiles. On the perimeters, in order to create a further constraint to the seismic action, two types of elements: "fixed' (Details A) and 'runner' (Detail B). With the "fixed" constraint, the structure is constrained to the wall preventing any movement; With the "runner" constraint the structure, in case seismic action, is free to flow while it is still constrained in the direction and without being able to move in a rotational direction.

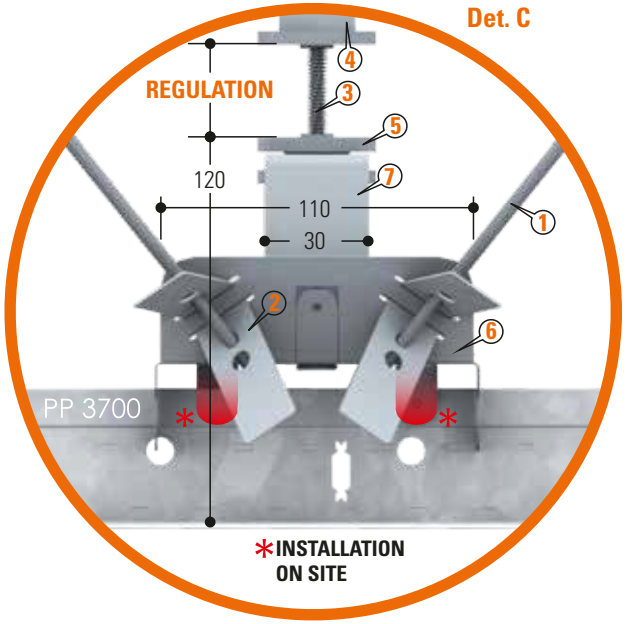

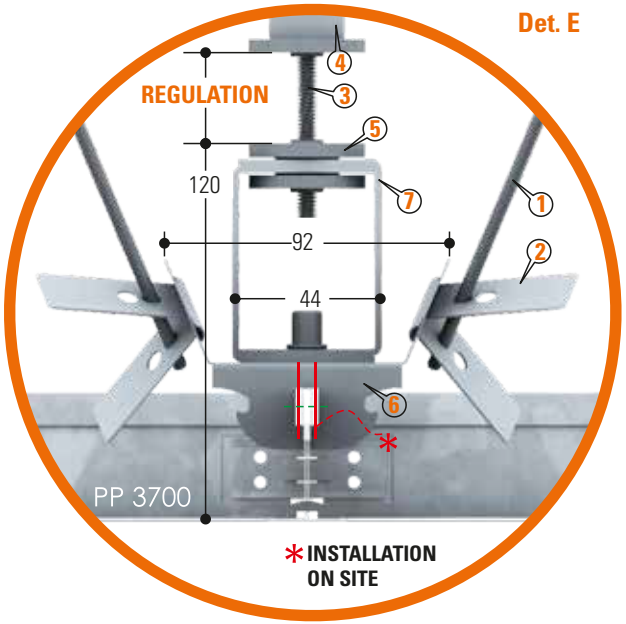

PART OF THE SYSTEM	
1	BAR Ø 4
2	HARMONIC SPRING - MRU
3	THREADED ROD Ø 6
4	ELIOS TUBULAR
5	KNURLED NUTS
6	SEISMIC HOOK
7	"C" CLAMPS
8	PERIMETER ACCESSORIES

STRUCTURE / PERIMETER CONNECTION, SIMPLE VISIO and FLAT PANEL TYPE

PERIMETER AND ACCESSORY VISIO and FLAT TYPE - CONDITIONED CONSTRAINT

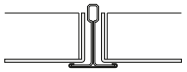

T24

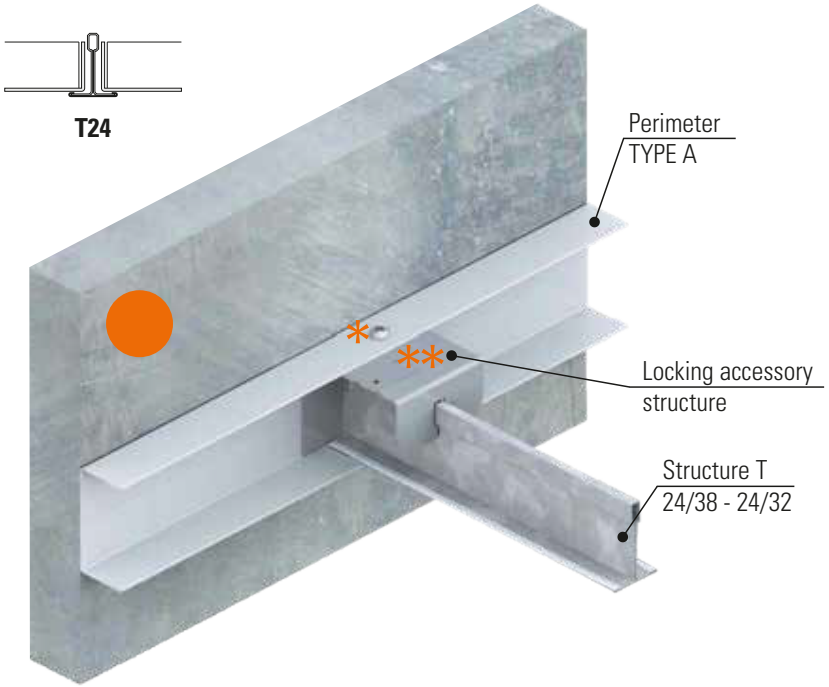

* **Not lowered flap profile not locked**

** **Not lowered flap profile not locked**

PERIMETER AND ACCESSORY VISIO and FLAT TYPE - FIXED CONSTRAINT

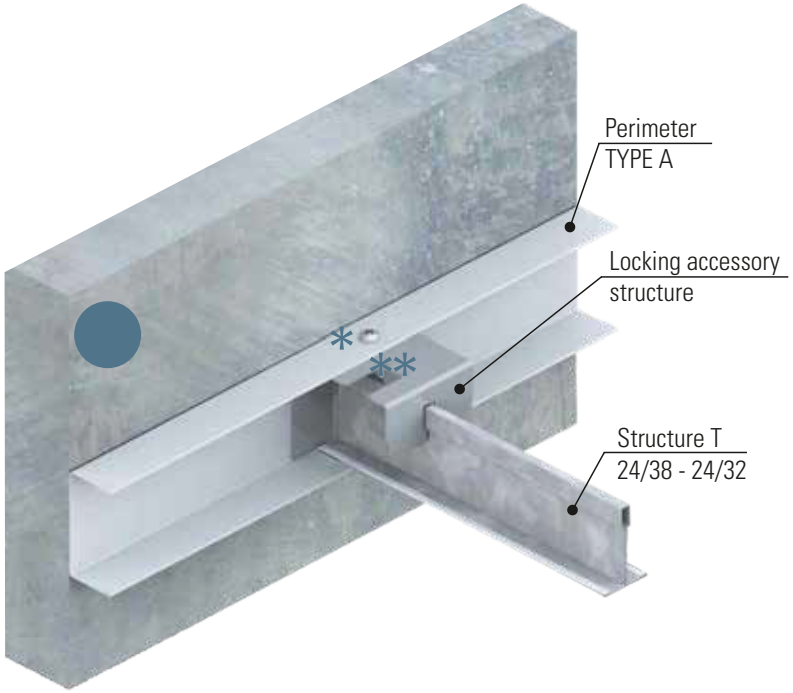

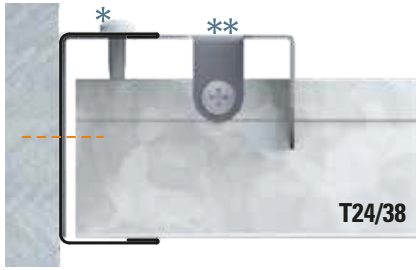

* **Lowered flap profile locked**

** **Lowered flap profile locked**

G SEISMIC Kit
ON PROFILES FOR **PLASTERBOARD**

ANTONIO GUERRASIO
G SEISMIC • ANTI-SEISMIC SOLUTIONS

G SEISMIC SCHEME ON **PLASTERBOARD** PROFILES

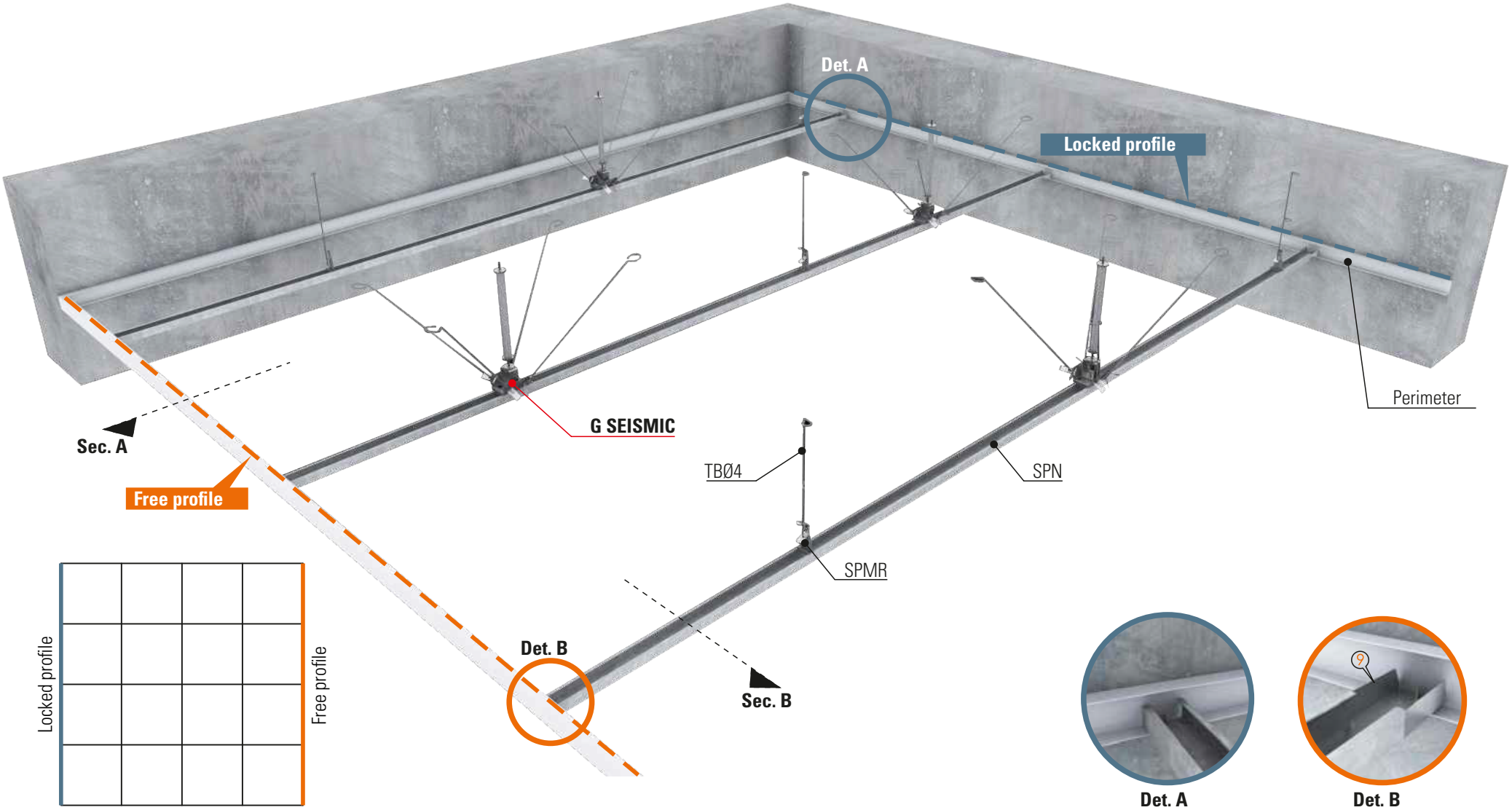

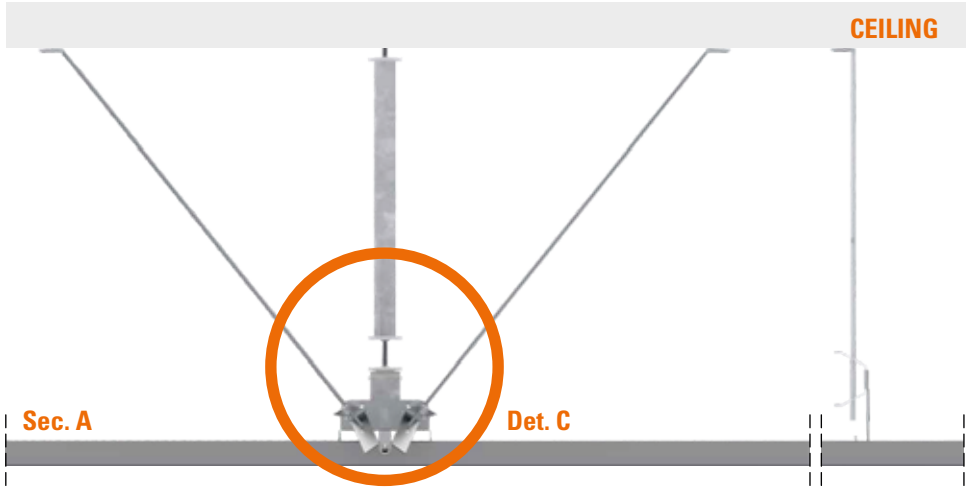

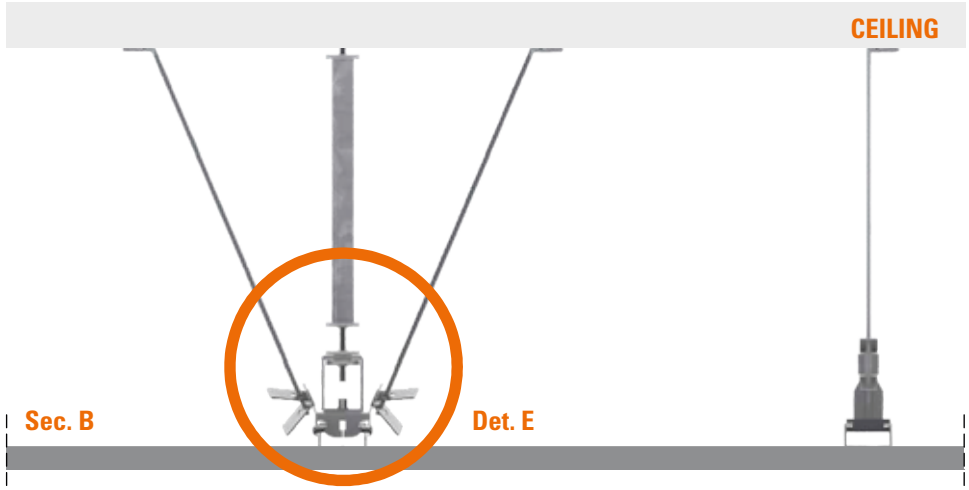

The **G SEISMIC** system should be installed on the carrier profile in a simple form by snapping it onto it. Once inserted, it must be fixed with the help of self-drilling screws (Dett.C,E). On the perimeter, in order to create a further constraint to the seismic action, two types of elements must be applied: 'fixed' (Dect. A) and 'runner' (Dect. B). With the "fixed" constraint, the substructure is bound to the wall preventing any movement; with the 'runner' constraint the substructure, in case of seismic action, is still free to slide in the direction and without being able to make rotational movements.

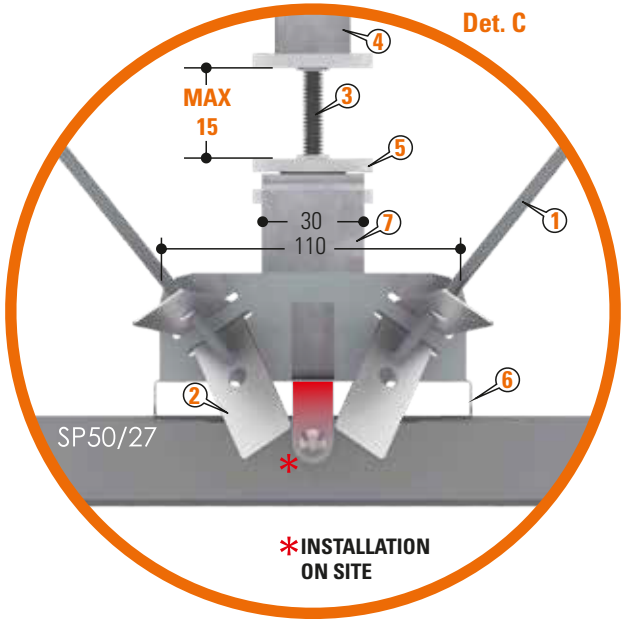

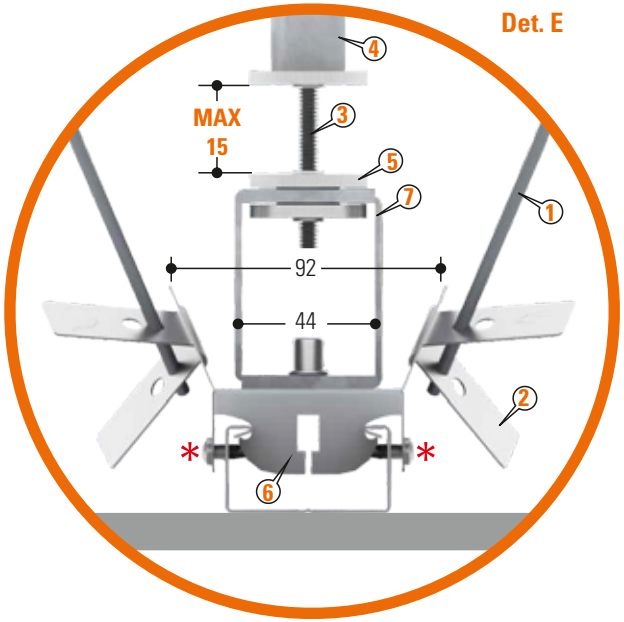

PART OF THE SYSTEM	
1	BAR Ø 4
2	HARMONIC SPRING - MRU
3	THREADED ROD Ø 6
4	ELIOS TUBULAR
5	KNURLED NUTS
6	SEISMIC HOOK
7	"C" CLAMPS
8	PERIMETER ACCESSORIES

STRUCTURE / PERIMETER CONNECTION, SINGLE FRAME FOR **PLASTERBOARD**

PERIMETER AND ACCESSORY - **RUNNER CONSTRAINT**

*** Fixing the accessory on the perimeter with a screw**

PERIMETER AND ACCESSORY - **FIXED CONSTRAINT**

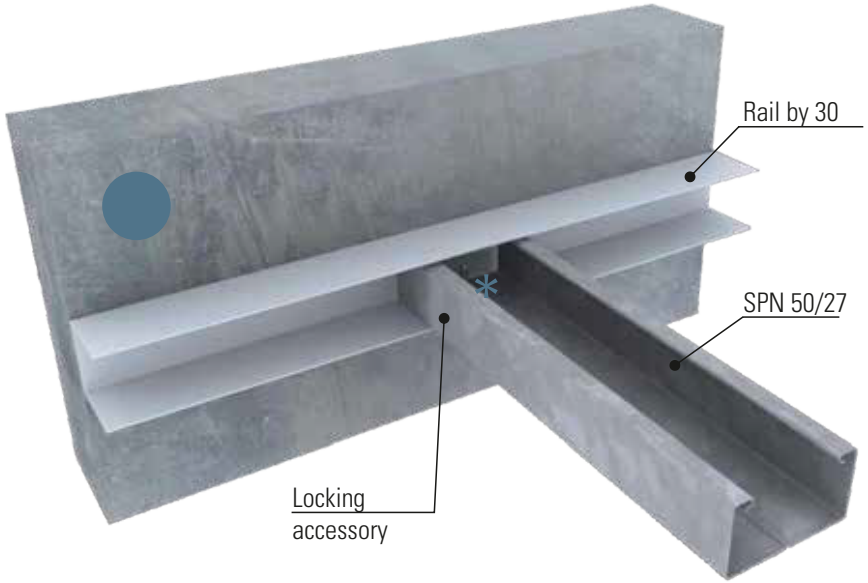

*** Fixing of the carrier on the perimeter with a screw**

ANTONIO GUERRASIO
G SEISMIC • ANTI-SEISMIC SOLUTIONS

G SEISMIC

ANTI-SEISMIC SOLUTIONS

ANTONIO GUERRASIO S.R.L.

Via Acquedotto 1

84086 Roccapiemonte (SA)

Phone +39 081 931 788

Fax +39 081 934 933

E-mail info@vertebra.com

1970 / 2020
50° ANNIVERSARIO

FEBRUARY 2020 EDITION • The technical data contained in this publication are the actual data of the products at the time of printing. In order to improve the technical and functional characteristics and to obtain the best quality/price ratio, Antonio Guerrasio s.r.l. reserves the right to make changes to the products without notice.

GS2019 IT • R03 • 03/03/2020 andrea valpiselli