SIGILLO

GUERRASIO

The philosophy of Guerrasio, the company that has been putting its experience at the service of architecture for over 50 years, was born from the meeting of history, craft tradition and advanced technology. A philosophy summarised in the company vision: **technology & ideas for architecture.**
With three production sites, strategically located in northern, central and southern Italy, the production includes, starting from sheet metal coils, the cold working of the sheet by master carpenters, with the support of systems and numerical control machines for bending, pressing, laser cutting and powder coating. Through constant research and development, Guerrasio produces metal profiles and systems for the sector of technical interior finishes, metal ceiling systems integrated in panels, strips or gratings for civil and religious buildings, for naval furnishings, for the hospital and penitentiary sectors; it also produces ceiling lights and airtight diffusers, patented flexible metal profiles (with the VERTEBRA® brand), road noise barriers and a wide range of completing accessories. Besides the standardized productions, what makes Guerrasio unique is the ability to respond to the particular needs of professionals and companies with ad hoc solutions designed for the individual construction site, being able to engineer any architectural proposal thanks to the team of specialized technicians who work in synergy with the designers. Thanks to the new patents and the prizes won over time, today the solid reputation acquired over the years ensures the presence of Guerrasio products in the most important architectural works, such as in the Guggenheim Museum in Bilbao of the architect Frank O. Gehry, symbol of contemporary architecture.

PCC Cert CERTIFICATE ISO 9001
PCC Cert CERTIFICATE ISO 14001
PCC Cert CERTIFICATE ISO 18001
PCC Cert CERTIFICATE OHSAS
ECOEM
PROTOCOLLO LEED
CE EN 14195 EN 13964
IP 66

SIGILLO

MODULAR FALSE CEILING WITH GASKET

04. SIGILLO SYSTEM
06. SIGILLO with SP 45/18
07. SIGILLO with SP 50/27
08. SIGILLO with G SEISMIC KIT
09. INCIDECES DOUBLE ROOF FRAME
10. PLENUM OPS
12. OCCULTA SIGILLO
15. PERIMETER AND CONNECTION PROFILES
SUSPENSION SYSTEMS AND ACCESSORIES

MODULARITY
SAFETY
BRIGHTNESS
FUNCTIONALITY
POINT INSPECTION

SYSTEM

SIGILLO

The SIGILLO system is an interior false ceiling that prevents the passage of dust, it is modular, easy to install and is integrated with LED ceiling lights and plenums for controlled ventilation. The panels have a standard size of 600x600 and 600x1200mm, can be inspected at any time and the raw material of the panel can be aluminium, painted steel or stainless steel. The Guerrasio company can issue credits according to LEED standards for its products, contributing to the creation of healthy living and working spaces that contribute to greater productivity, health, comfort and safety for its occupants. The panels and substructure are CE-marked according to R. (EU)
305/11, and the ceiling lights are CE marked according to European directives.

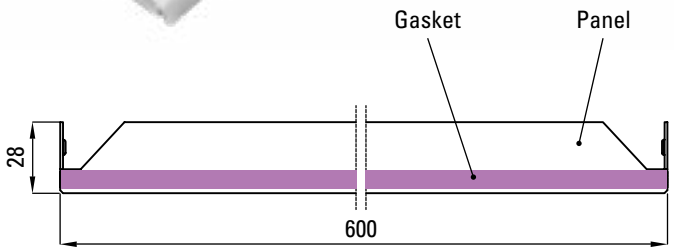

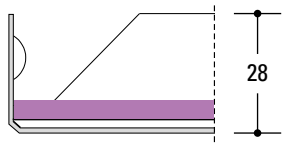

Bevelled edge 3 mm

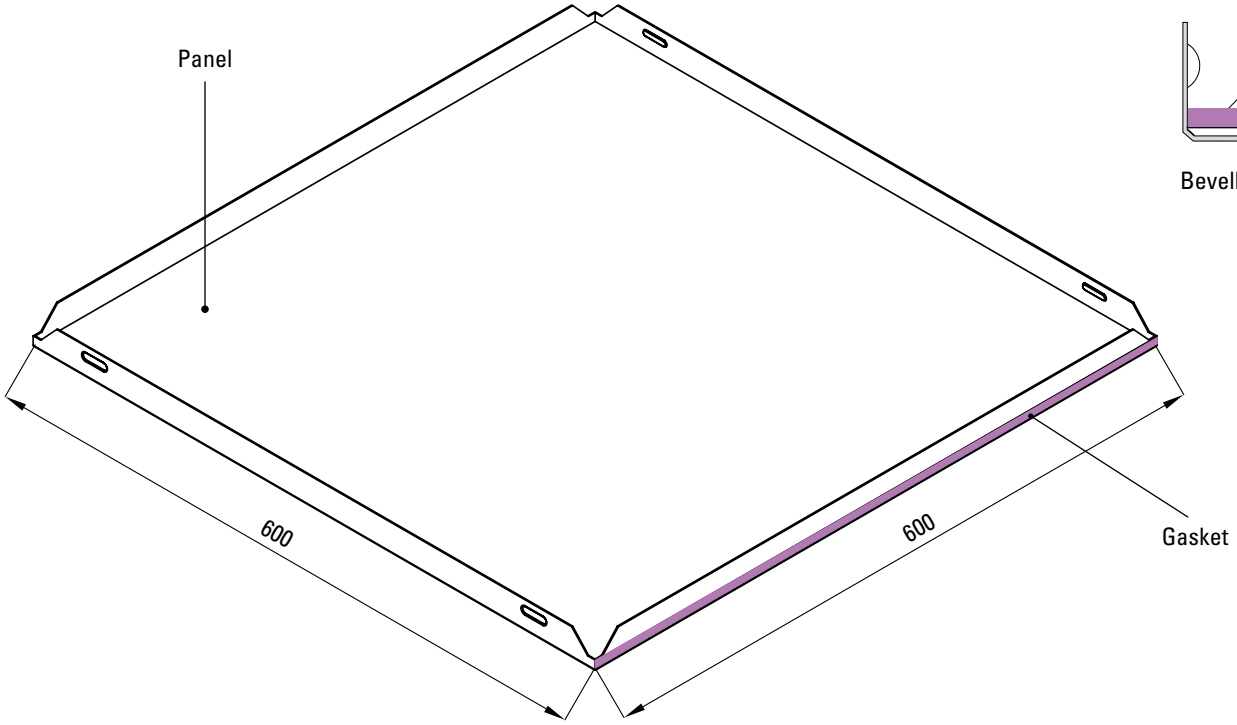

TECHNICAL FEATURES

European legislation:	CE - EN 13964
Durability:	Class B
Fire resistant:	A1
Sound absorption:	EN ISO 354
Standard color:	White prepainted DONN-WHITE, Silver, Mirror aluminum Post-painted RAL - NCS - Sublimated folder
Standard material:	Alluminium (Alloy 3000H46) Galvanized steel (DX51DZ) 304 stainless steel
Standard thickness:	0,4 - 0,5 - 0,6 mm
Standard modules:	600x600 mm beveled edge 600x1200 mm beveled edge
Average system weight:	4-4 kg/mq

STANDARD MODULES

PERIMETER AND CONNECTION PROFILES

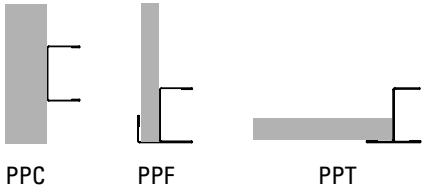

FINISHING

TYPE OF PANEL

Smooth panel

PRE-PAINTED COLOUR

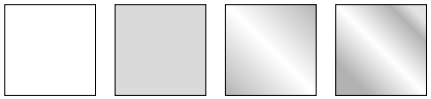

White | Silver | Mirror aluminium | stainless steel

POST-PAINTED COLOUR

RAL NCS

ACOUSTIC INSULATION

Soundproofing panel

Polyester fibre

Mineral wool

ACCESSORIES

LIGHTING

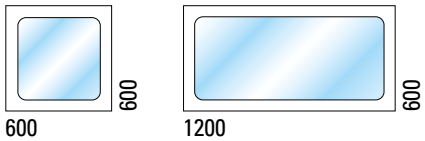

AC TREATMENT

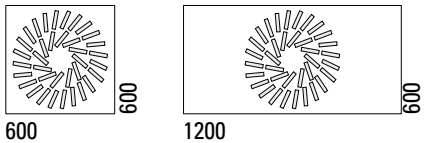

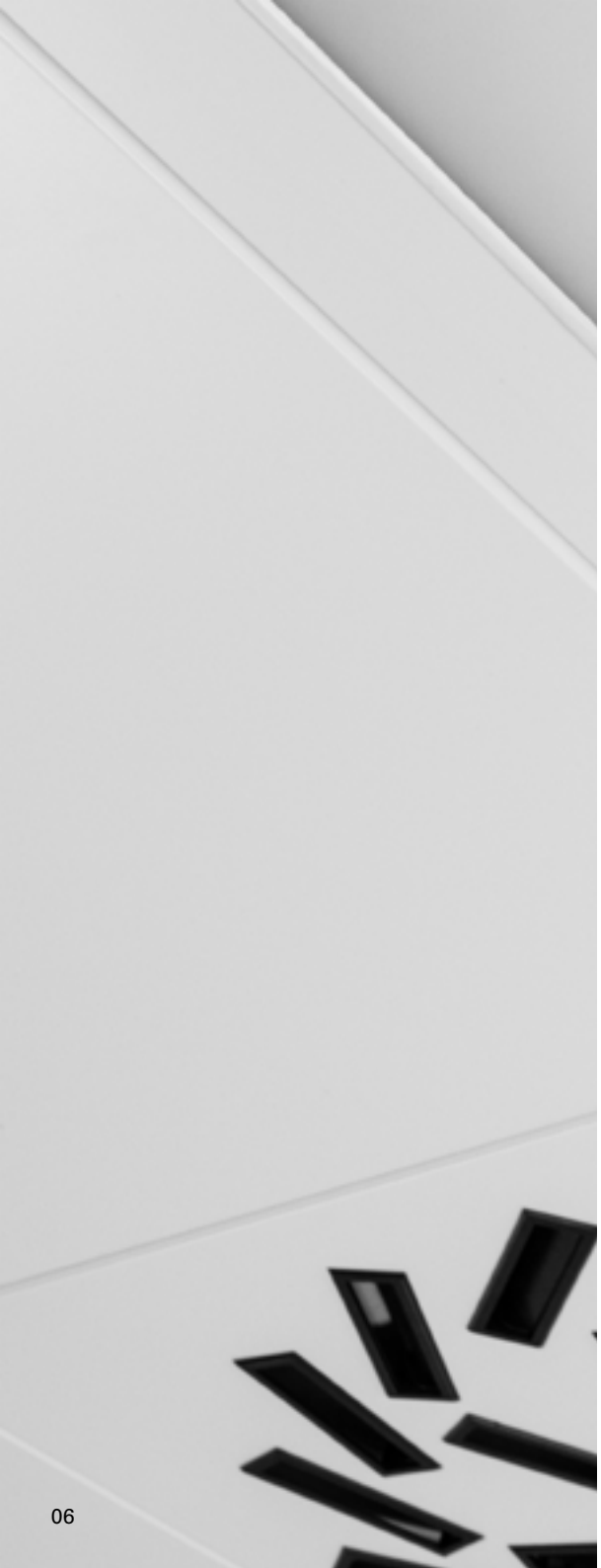

SIGILLO

with SP 45/18

The SIGILLO system shown on the side is non-conplanar double roof frame, punctually inspectable and it is composed of a primary profile type SP45 /18 which is suspended from the ceiling and a secondary profile type PPN. The suspension and connection systems are simple to install and adjustable at any point, the panel is mounted from below, and after installing the gasket, it must be snapped into the PPN profile. The perimeter is composed of a C profile, it is complete with gasket and internal profile which guarantees the flatness of the panel cut on site. In case of maintenance, the panel can be disassembled using a gasket.

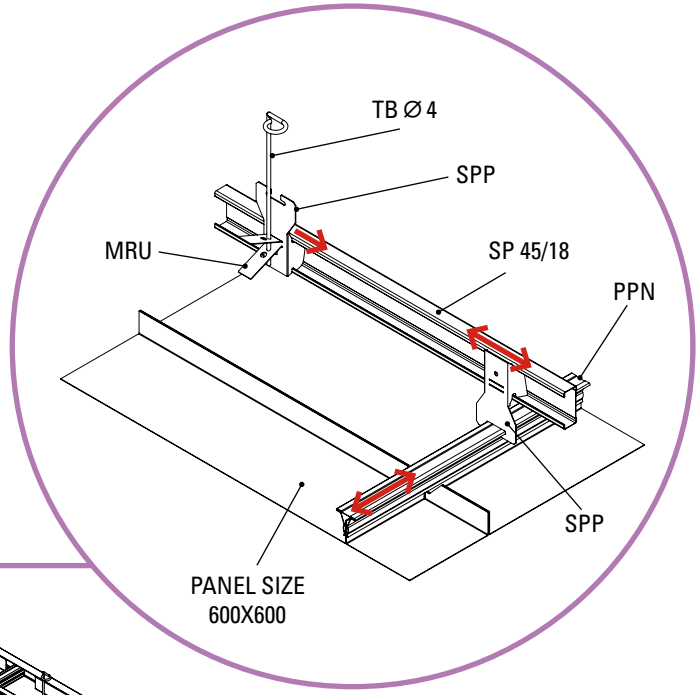

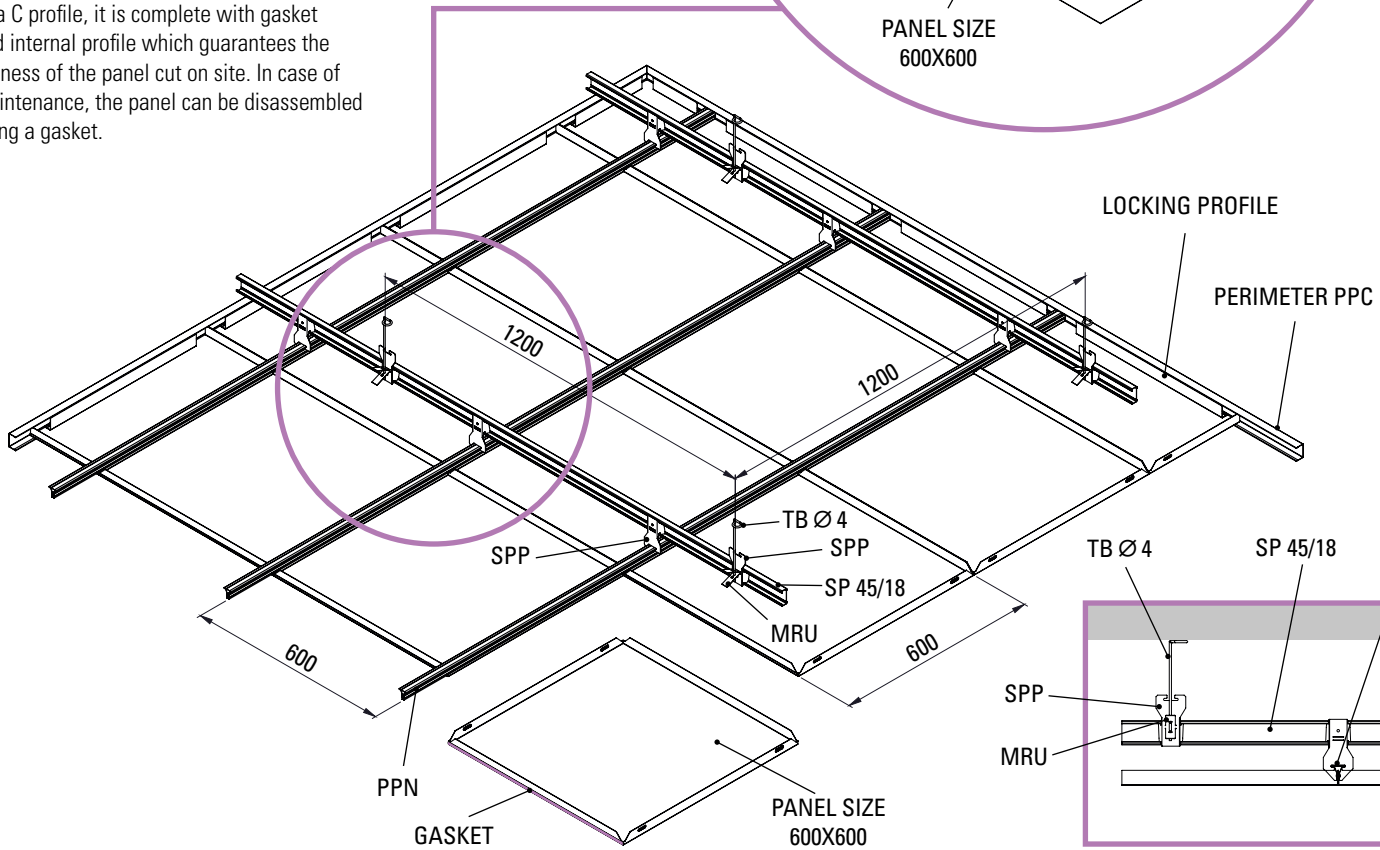

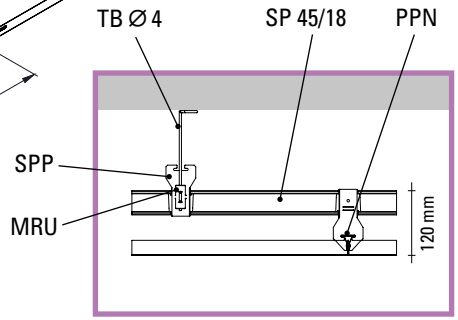

SIGILLO

with SPN 49/27

The SIGILLO a non-coplanar double roof frame system and is particularly suitable for solutions with limited space. The false ceiling can be inspected punctually, It is composed of a primary profile type SPN 49/27 which is suspended from the ceiling and a secondary profile type PPN. The suspension and connection systems are not only easy to install, but also adjustable at any point. The panel is mounted from below, and after installing the gasket it must be snapped into the PPN profile. The perimeter is composed of a C-profile, complete with gasket and an internal profile that guarantees the flatness of the cut panel. The perimeter is composed of a C-profile, it is complete with a gasket and an internal profile that guarantees the flatness of the panel cut on site. In case of maintenance, the panel can be disassembled using a gasket

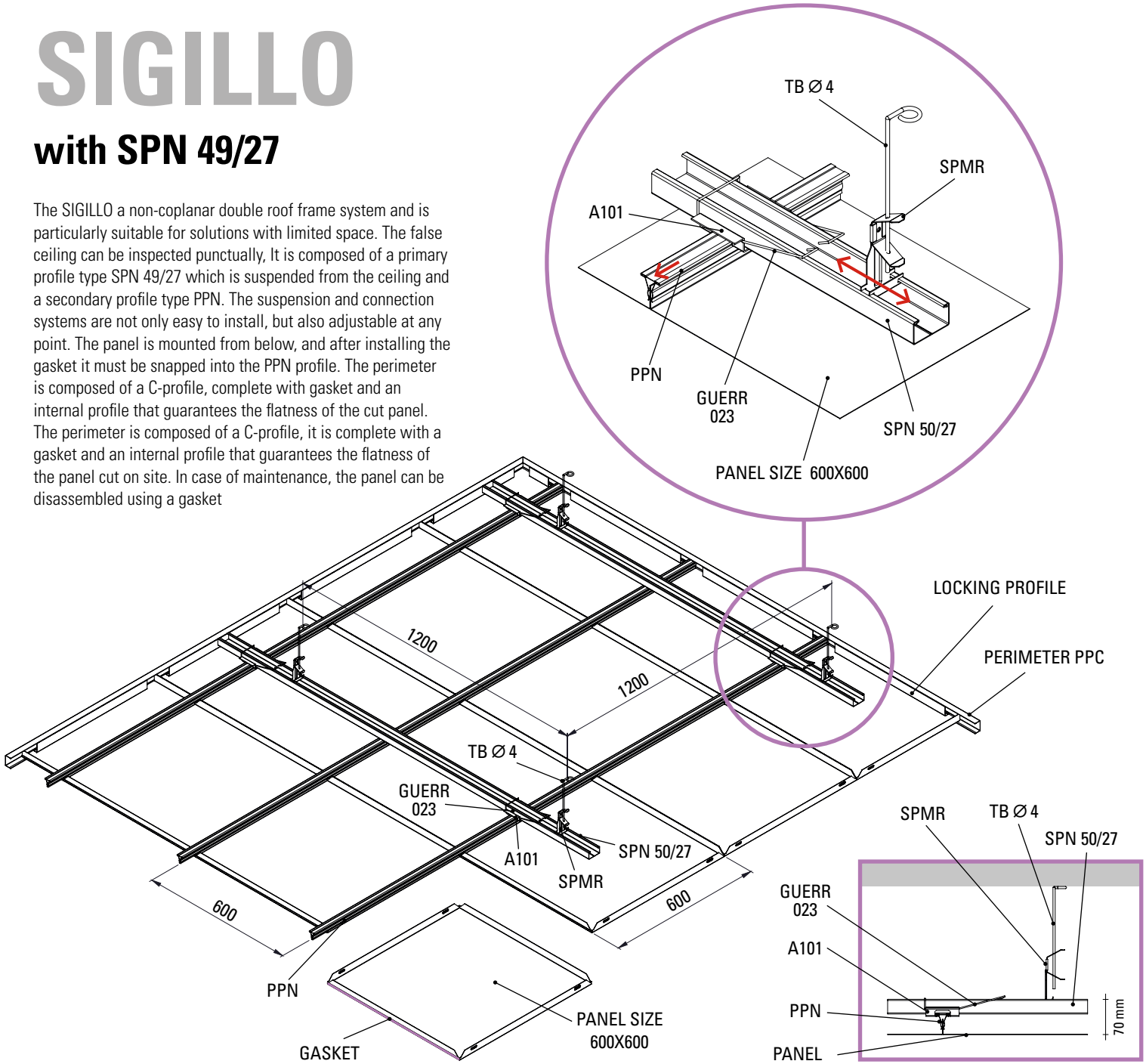

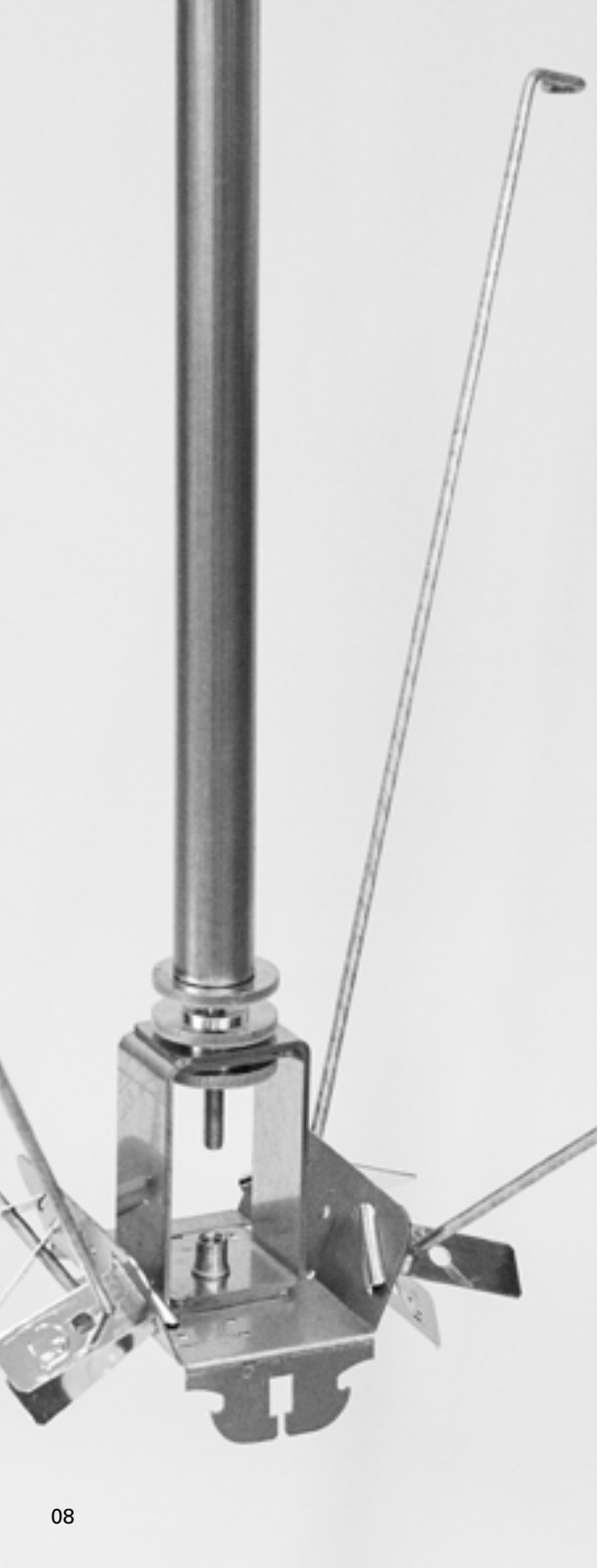

SIGILLO

with KIT G SEISMIC

ANTI-SEISMIC SOLUTIONS

The SIGILLO system, if mounted with the SPN49 / 27 profile, can be integrated with the G-SEISMIC kit, the quantity of which is proportionate to the characteristics of the building and the seismic area. The simplicity of assembly and the guarantee of resistance to the stresses of the earthquake, give a greater guarantee to the false ceiling. On the side we show the assembly of the G-SEISMIC kit, which is integrated into the false ceiling with SPN49 / 27, and also the perimeter anchoring system t that controls the movement of the floating false ceiling in the event of an earthquake.

PATENTED PRODUCT

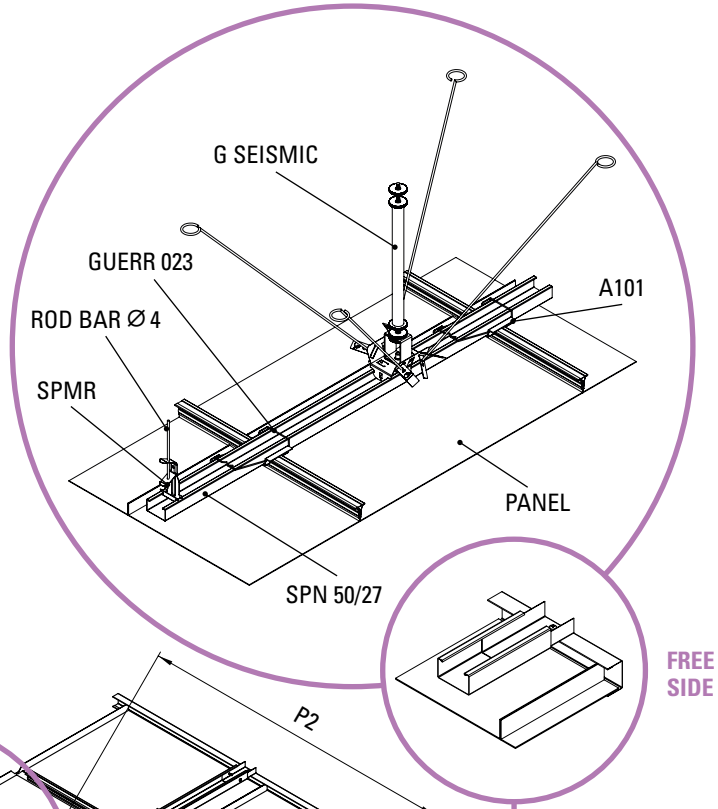

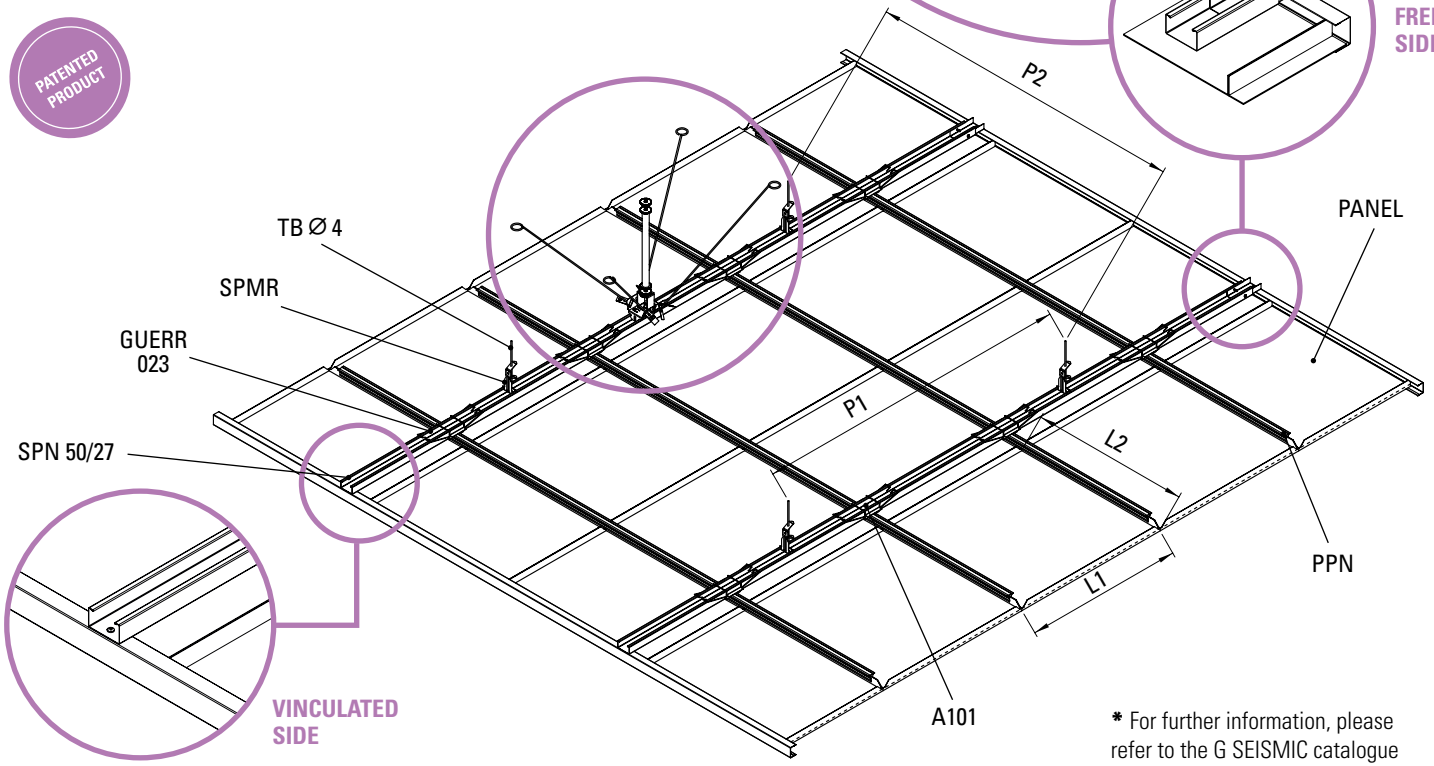

* For further information, please refer to the G SEISMIC catalogue

INCIDENCES

DOUBLE ROOF FRAME

SIGILLO

MODULO 600X600

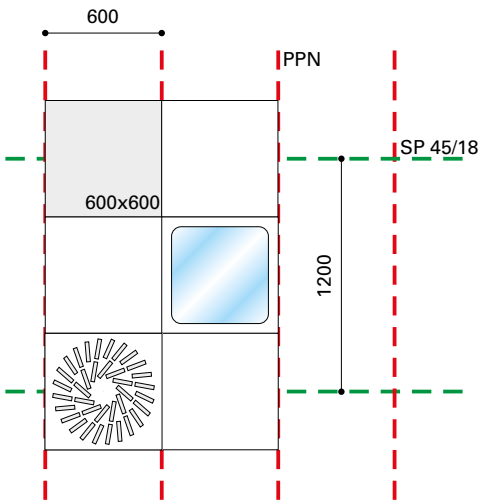

SP 45/18

THEORETICAL INCIDENCES

PPN *Bearing profile*	1,67	m/mq
Panel *600 x 600 mm*	2,78	pz/mq
SPP *Suspension for PPN*	2,10	pz/mq
MRU *Adjustment spring*	0,70	pz/mq
TBØ4 *Rod bar*	0,70	pz/mq
SP 45/18 *Primary profile*	0,83	m/mq

SPN 50/27

THEORETICAL INCIDENCES

PPN *Bearing profile*	1,67	m/mq
Panel *600 x 600 mm*	2,78	pz/mq
SPN 50/27 *Primary profile*	0,83	m/mq
A 101 *Adjustment spring*	1,40	pz/mq
GUERR 023 *Rod bar*	1,40	pz/mq
SPMR *Suspension for PPN*	0,70	pz/mq

MODULO 600X1200

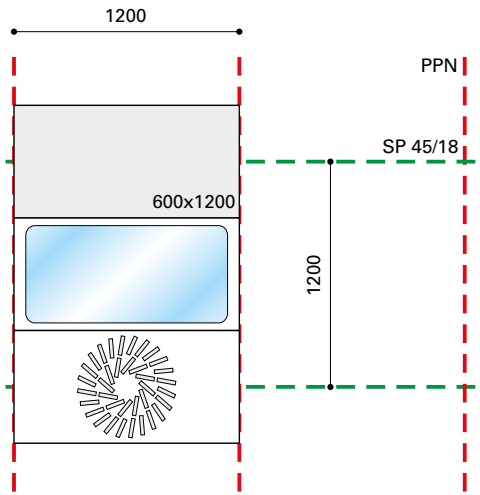

SP 45/18

THEORETICAL INCIDENCES

PPN *Bearing profile*	0,83	m/mq
Panel *600 x 1200 mm*	1,39	pz/mq
SPP *Suspension for PPN*	1,40	pz/mq
MRU *Adjustment spring*	0,70	pz/mq
TBØ4 *Rod bar*	0,70	pz/mq
SP 45/18 *Primary profile*	0,83	m/mq

SPN 50/27

THEORETICAL INCIDENCES

PPN *Bearing profile*	0,83	m/mq
Panel *600 x 1200 mm*	1,40	pz/mq
SPN 50/27 *Primary profile*	0,83	m/mq
A 101 *Adjustment spring*	1,40	pz/mq
GUERR 023 *Rod bar*	1,40	pz/mq
SPMR *Suspension for PPN*	1,40	pz/mq

PLENUM OPS

For ventilation and air conditioning systems, SIGILLO is equipped with plenums, diffusers and extractors, made of panels with the same aesthetic and performance characteristics as the panels. The plenum can be supply and return, it is equipped with an air flow control damper and is available with and without an internal filter. It is made of 8/10 galvanized steel sheet and guarantees perfect air tightness for its total integration in the SIGILLO false ceiling. It can be made of painted steel or stainless steel with side or top connection. The SIGILLO panel is available in the same raw material and finish as the chosen ceiling, and is equipped with thermoplastic fins for air regulation.

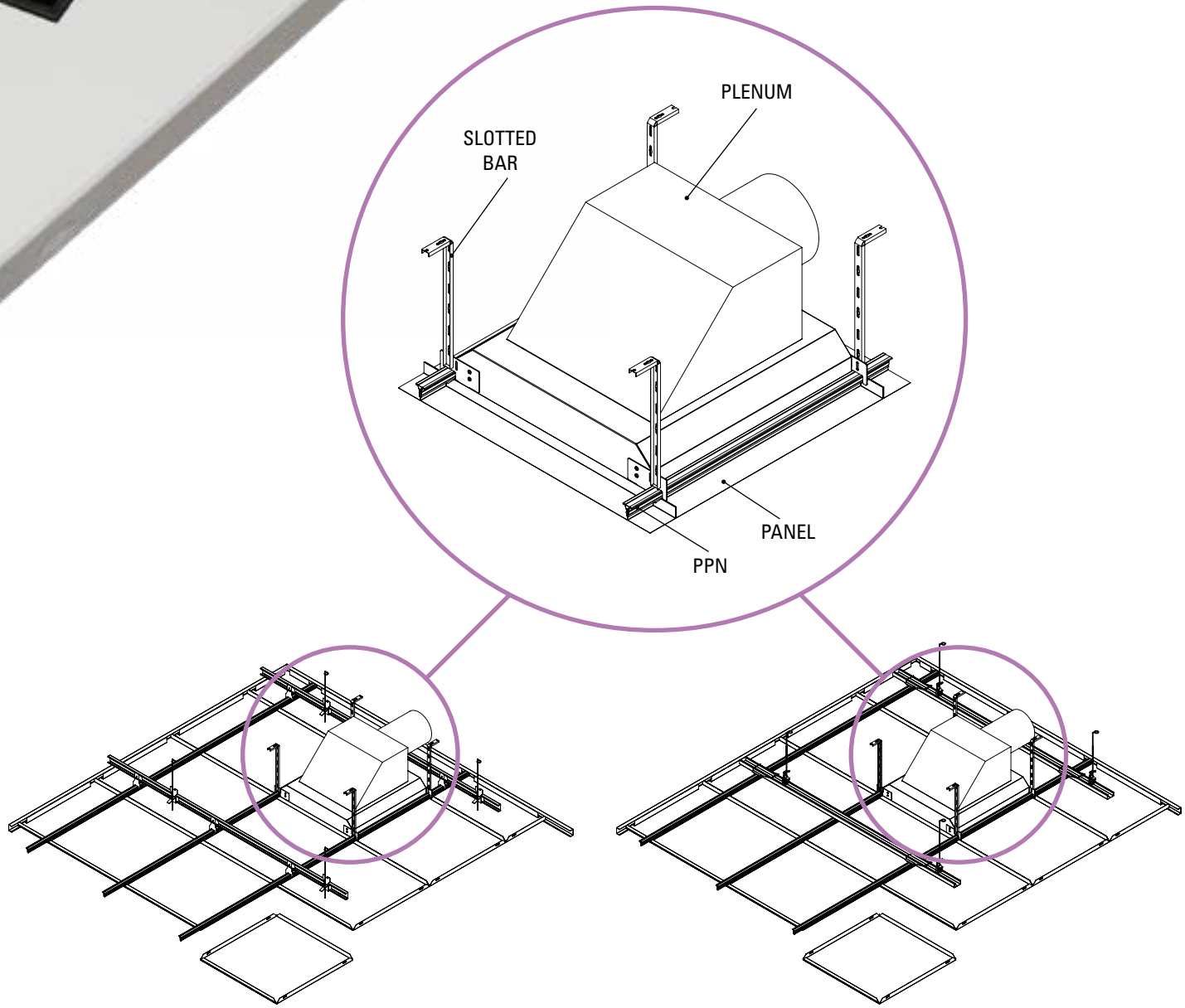

with SP 45/18

with SPN 50/27

PLENUM OF SUPPLY

Plenum of supply for module 600x600 mm made of post-painted galvanized steel, perfectly integrable with the false ceiling. The diffuser is complete with Hepa H14 filter, damper and thermoplastic fins to regulate the air supply

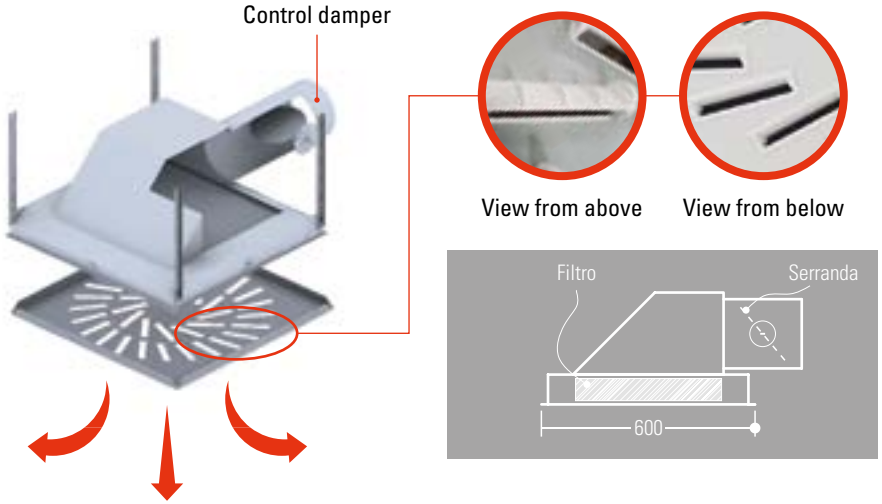

PLENUM OF RETURN

Plenum of return for module 600x600 mm made of post-painted galvanised steel, perfectly integrable with the false ceiling. The diffuser is complete with radial slots, made by directly cutting the pre-painted or post-painted panel, as shown in the detail.

N.B.: The plenum, mounted on the supporting structure, must be rigidly suspended with slotted bars. The screen must be mounted following the same assembly procedures as the false ceiling panels.

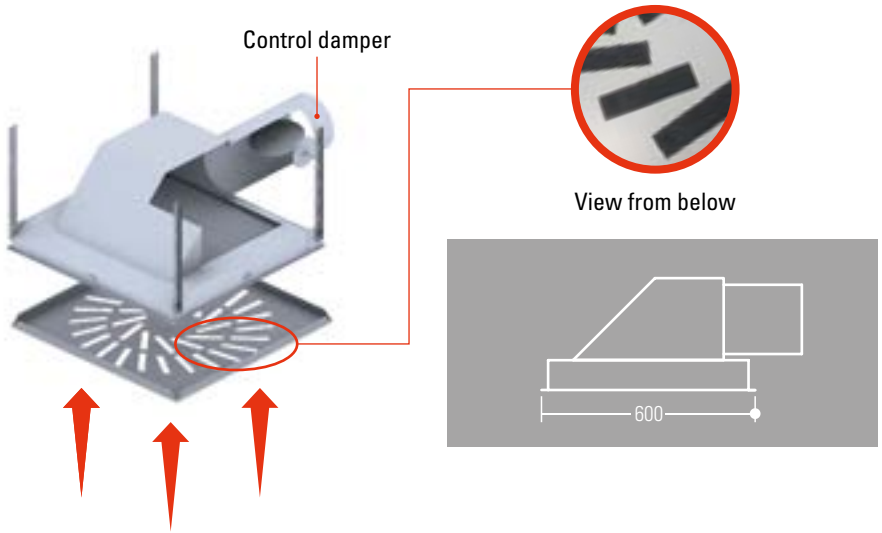

HELICOIDAL FLOW DIFFUSERS

Air diffuser with or without adjustable slots (extraction supply), positioned in a daisy chain, particularly suitable for helical flows.
It is used for both cooling and heating with installation on low to medium height ceilings (2.7-3.5 m). Unidirectional flow diffusers on request

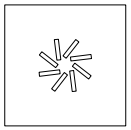
8 SLOTS
DEM60F8F305
DER60F8F305

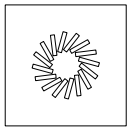
16 SLOTS
DEM60F16F305
DER60F16F305

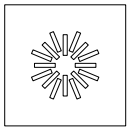
16 SLOTS
DEM60F16F305M
DER60F16F305M

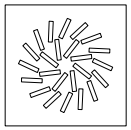
24 SLOTS
DEM60F24F457
DER60F24F457

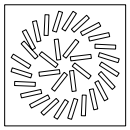
32 SLOTS
DEM60F32F515
DER60F36F515

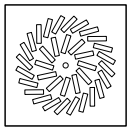
36 SLOTS
DEM60F32F515
DER60F36F515

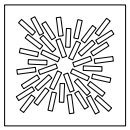
40 SLOTS
DEM60F40F515
DEM60F40F515

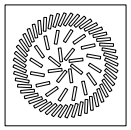
72 SLOTS
DEM90F72F762
DER90F72F762

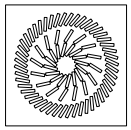
80 SLOTS
DEM90F80F762
DER90F80F762

CEILING LIGHT

OCCULTA SIGILLO

Recessed and airtight integrated LED ceiling light for false ceiling installation, this is the OCCULTA with high IP 66 protection. The ceiling light is available with dimensions 600x600 and 600x1200mm and has the same finish as the false ceiling, it is possible to make it with LED light only, dimmable, RGB and withIP43 or IP65 protection degree

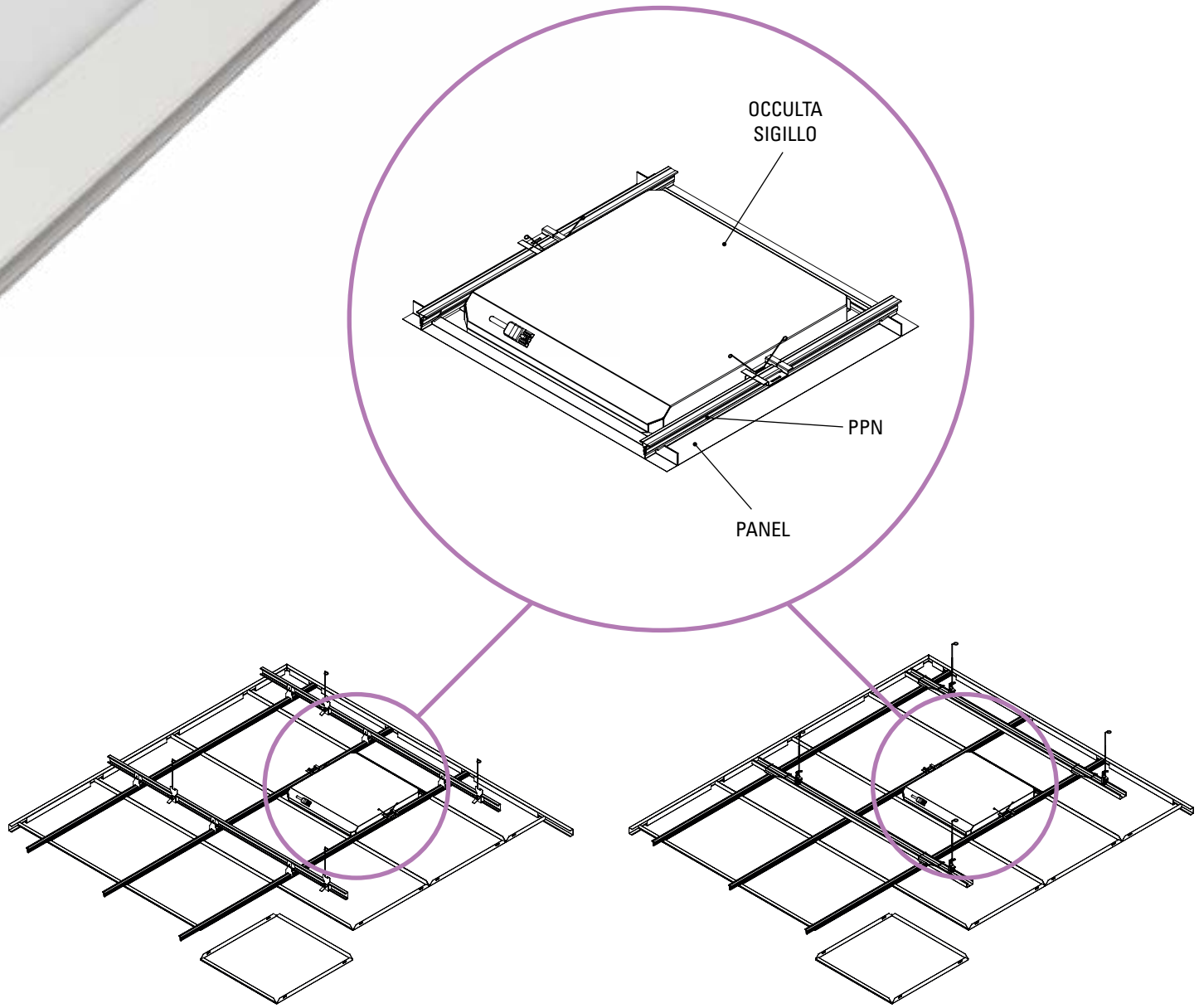

with SP 45/18

with SPN 50/27

PANEL

The panel finish can be pre-painted or post-painted, depending on the ceiling panel.

BODY

8/10 thick aluminium sheet, post-painted. The fixture is supplied complete with fixing accessories.

OPTICAL GROUP

Colour rendering Ra >90 Plexiglass LED with high luminous transmittance.

WIRING / ELECTRONICS

230/50Hz power supply with 0.75 mm2 cross-section cable and PVC-HT sheathing, flame retardant according to CEI 20-35 standards and compliant with CEI 20.20 and CEI CENELEC HD 21 standards. 2P+E or 4P+E automatic terminal block, maximum wire cross-section allowed 2.5 mm2 Insulation class I. Suitable for installation on normally flammable surfaces. Electronic ballast EEI=A2 220-240, 0/50-60Hz. power factor > 0.95

TECHNICAL SPECIFICATIONS

- CE marked product
- Power supply 230v - 50hz
- IP43 Degree of protection
- Recycling and WEEE management
- LED lighting
- RGB
- Bottom mounting
- Dimmability
- Emergency 3h
- Special waste
- Suitable for installation in insulated ceilings
- LED modules not replaceable by the end user

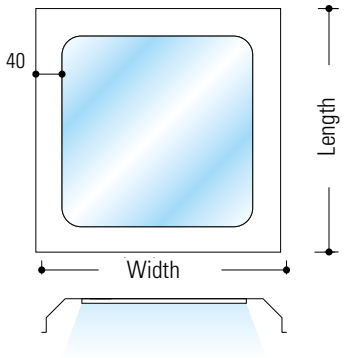

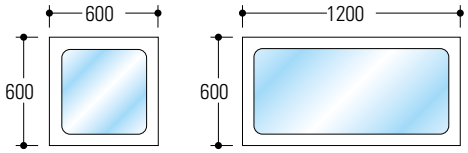

50.000 hours of durability

LED - 3 years warranty

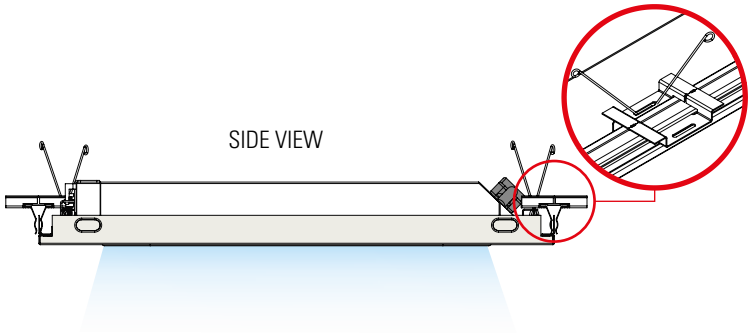

OCCULTA SIGILLO 84 38 W

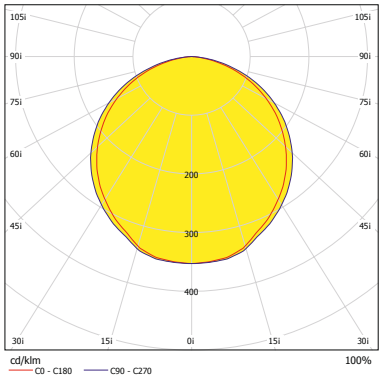

OCCULTA SIGILLO 100 40 W

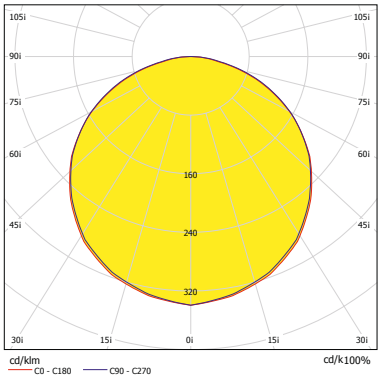

OCCULTA SIGILLO 144 50 W

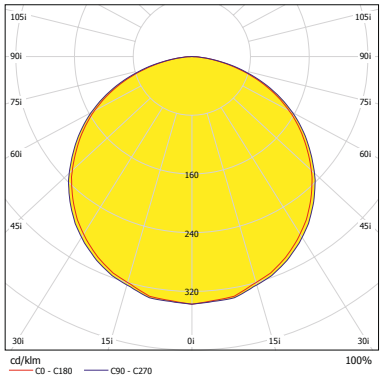

OCCULTA SIGILLO 200 80 W

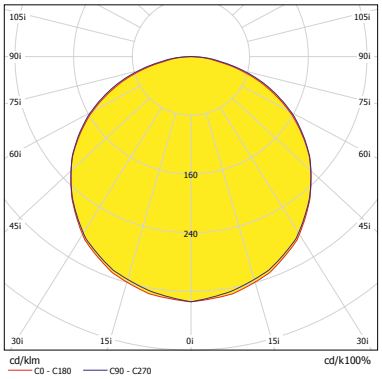

OCCULTA SIGILLO 265 92 W

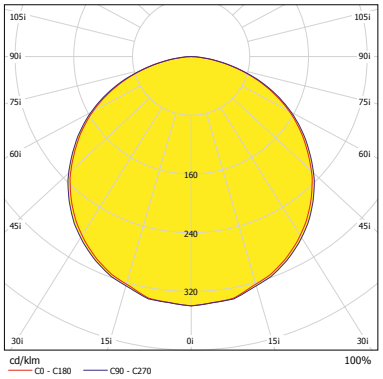

HIGH QUALITY PANELS

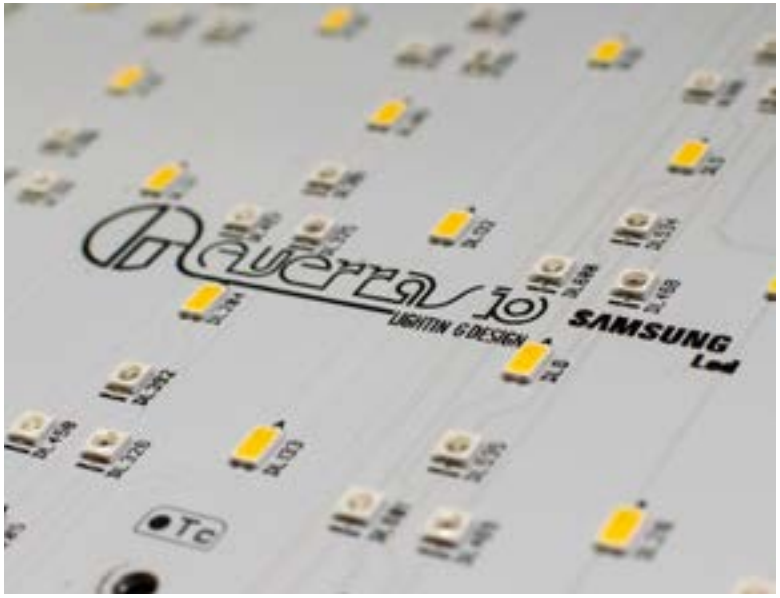

AVAILABLE TEMPERATURES

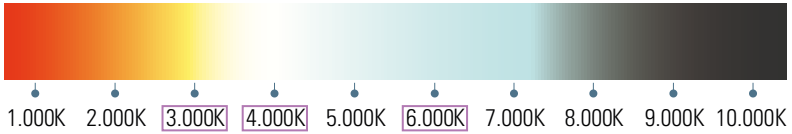

INTERNAL TESTING LABORATORY

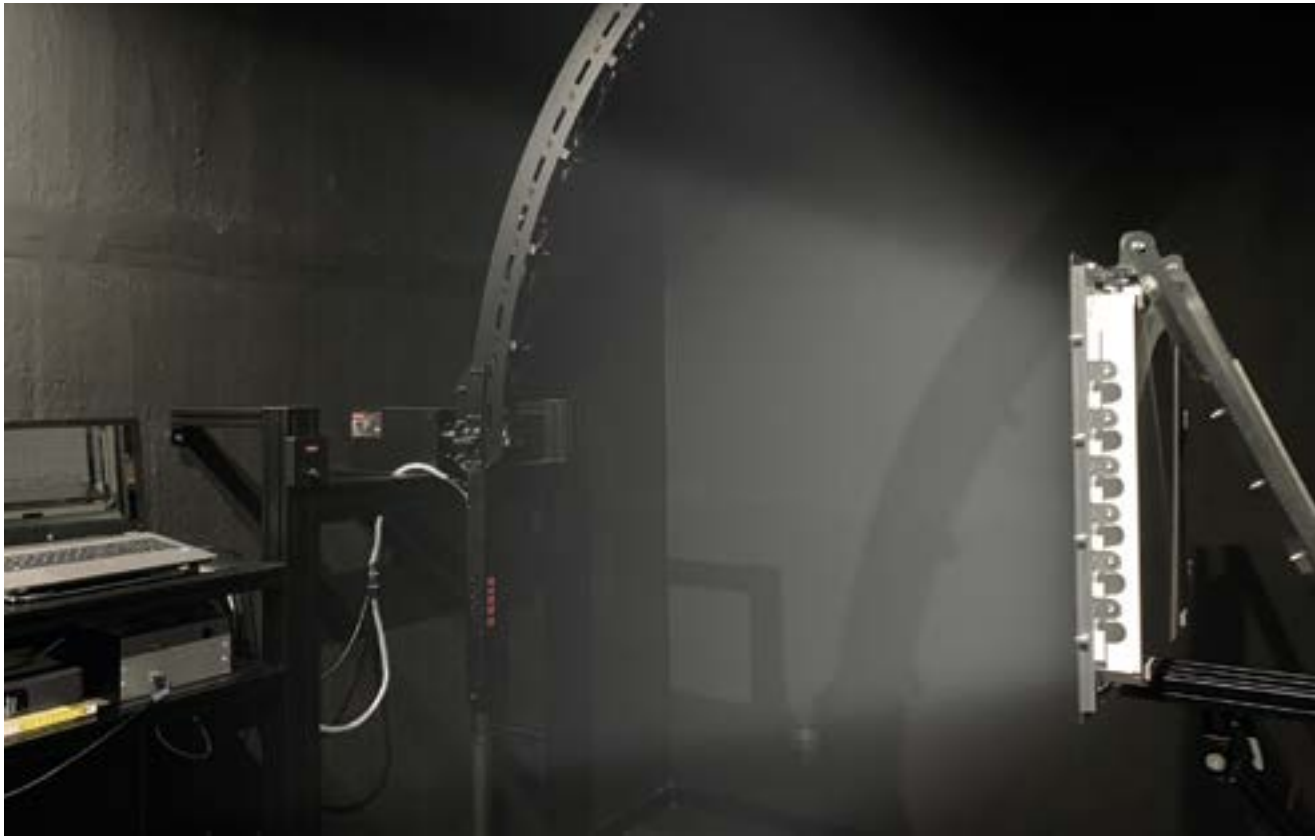

PERIMETER AND CONNECTION PROFILES

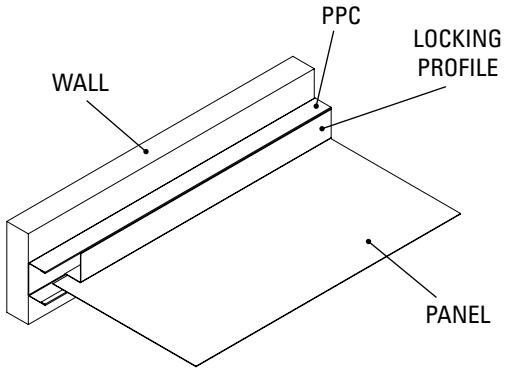

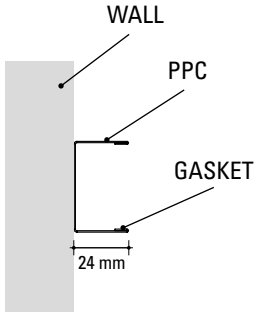

– "C" perimeter profile with gasket

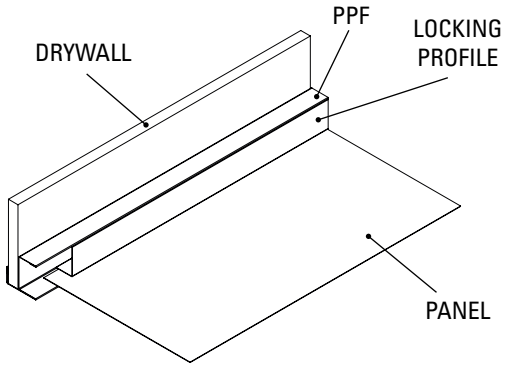

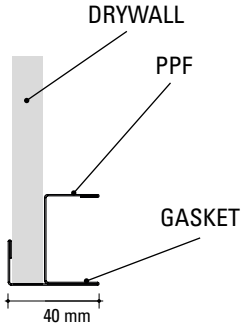

– "C" perimeter profile with gasket

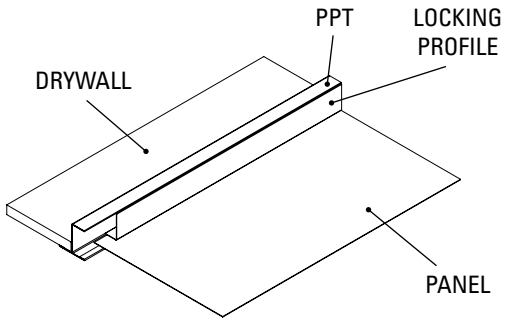

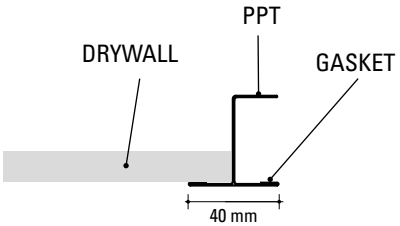

– Connection profile for vertical veil and false ceiling

SUSPENSION SYSTEMS AND ACCESSORIES

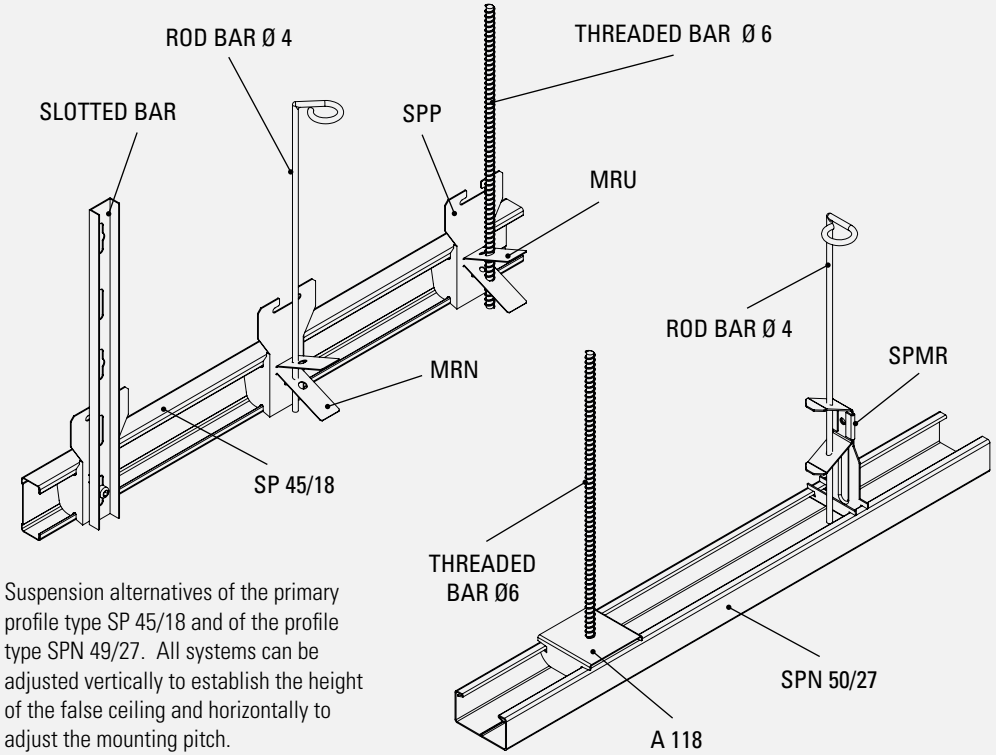

Suspension alternatives of the primary profile type SP 45/18 and of the profile type SPN 49/27. All systems can be adjusted vertically to establish the height of the false ceiling and horizontally to adjust the mounting pitch.

Spotlight holder bracket, suitable for mounting spotlights or loudspeakers with a modest weight on site. The bracket has a constructive section that unloads the weight on the PPN supporting profile which also supports the panels, made of 6/10 galvanized steel and with hole Ø on request.

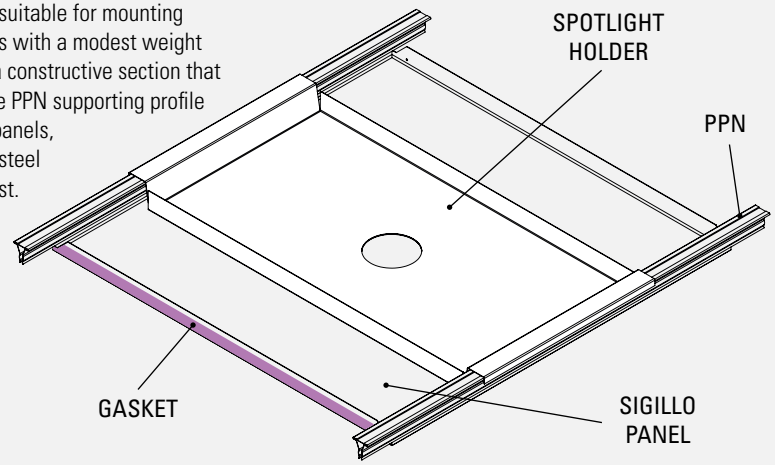

SIGLLO

ANTONIO GUERRASIO srl

Via Acquedotto, 1
84086 Roccapiemonte (SA)
Telefono: +39 081 931788
Fax: +39 081 934933
info@vertebra.com
www.vertebra.com

gaetanobarba\design

ST2022 EN • R03 • 02/03/2022